DEEPAK FERTILISERS
AND PETROCHEMICALS
CORPORATION LIMITED

DFPCL-K1/EHS/Env/2020-21/03

Date: 25th May 2020

Additional Principal Chief Conservator of Forest (C),
Ministry of Environment, Forest & Climate Change,
Regional Office (WCZ),Ground Floor, East Wing,
New Secretariate Building, Civil Lines
Nagpur – 440 001, Maharashtra.

Reference:

1. EC granted for for NPK Fertilizer Manufacturing Unit 6 Lakhs MTPA Project vide no. C F NO J-11011/320/2012-IA II(I) dt 12.10.2015.

Sub: Half yearly Environmental Clerance Compliance report.

Dear Sir,

Please find enclosed the half yeraly EC compliance report of **NPK Fertilizer Manufacturing** for the period of **October-2019 to March -2020**.

This is for your information and records please.

Thanking you,

Yours faithfully,

For, DEEPAK FERTILISERS AND PETROCHEMICALS CORP. LTD.,

DEEPAK PANDE
Head (EHS)

CC :

1. SRO, MPCB, Raigad Bhavan, 7th Floor, Sector-11, CBD-Belapur, Navi Mumbai – 400614.
2. Ministry of Environment, Forest, 1st Floor, New Administrative Building, Mantralaya, Mumbai – 400032.
3. CPCB Parivesh Bhawan, Opp. VMC Ward Office No. 10, Shubhanpura, Vadodara, Gujarat 390023.

FACTORY : Plot K-1, MIDC Industrial Area, Taloja 410 208, Dist. Raigad
Tel : +91 22 5068 4000 Fax : +91 22 2741 2413
CORPORATE OFFICE : Sai Hira, Survey No. 93, 25 / A1 and 25 / B1, CTS-1130, Mundhwa Ghorpadi Road, Mundhwa, Pune - 411 036
Tel.: 020-6645 8000 Website : www.dfpcl.com CIN : L24121MH1979PLCO21360

DATA SHEET

1		Project type: River - valley/ Mining / Thermal/ Industry / Nuclear/ Other (specify)	Industry
2		Name of the project	Expansion of NPK Fertiliser Manufacturing Unit at DFPCL Complex, K-1 to K- 5, MIDC Industrial Area, District Raigad, Maharashtra by M/s Deepak Fertilizers and Petrochemicals Corporation Ltd.
3		Clearance letter (s) /OM No. and Date	EC granted for for NPK Fertilizer Manufacturing Unit 6 Lakhs MTPA Project vide no. C F NO J-11011/320/2012-IA II(I) dt 12.10.2015
4		Location	
	a.	District (S)	Raigad
	b.	State (S)	Maharashtra
	c.	Latitude/longitude	19°03'57.6"N/73°07'58.8"E
5		Address for correspondence	
	a.	Address of Concerned Project Chief Engineer (with pin code & Telephone/ telex/ fax numbers	Mr. Deepak Pande (Sr.GM-EHS), M/s Deepak Fertilisers & Petrochemicals Corporation Ltd. Plot No. K-1, MIDC Industrial area, Taloja, District Raigad – 410208, Maharashtra. Phone: - 022-50684221, 9920942161
	b.	Address of Executive Project: Engineer/Manager (with pincode/ Fax numbers)	Same as above
6		Salient features	
	a.	of the project	Annexure-A
	b.	of the environmental management plans	Annexure-B
7		Break up of the project area	
	a.	submergence area forest & non forest	NA, (MIDC Land)
	b.	Others	NA
8		Break up of the project affected Population with enumeration of Those losing houses/dwelling units Only agricultural land only, both Dwelling units & agricultural Land & landless labourers/artisan	NA, (MIDC Land)
	a.	SC, ST/Adivasis	NA, (MIDC Land)
	b.	Others (Please indicate whether these Figures are based on any scientific And systematic survey carried out Or only provisional figures, it a Survey is carried out give details And years of survey)	NA
9		Financial details.	
	a.	Project cost as originally planned and subsequent revised estimates and the year of price reference	360 Crores
	b	Allocation made for environmental management plans with item wise and year wise Break-up.	Yes. **Year 2013-14 for Plot K-1 to K-8**. 1)Rs 5 lakhs for plantation. **Year 2014-15 for Plot K-1 to K-8**. 1)Rs 5 lakhs for plantation. 2)Rs 1.5 lakhs- Weather Monitoring Station. **Year 2015-16 for Plot K-1 to K-8**. 1)Rs 5 lakhs for plantation. **Year 2016-17 for Plot K-1 to K-8**. 1)Rs 5 lakhs for plantation. 2)Rs 3.9 lakhs - AMC for Online Emission & Effluent Quality Monitoring System. **Year 2017-18 for Plot K-1 to K-8**. 1)Rs 48 lakhs for plantation 2)Rs 3.9 lakhs - AMC for Online Emission & Effluent Quality Monitoring System. **Year 2018-19 for Plot K-1 to K-8**. 1)Rs 20.68 lakhs for plantation year 2018-19 for Plot K-1 to K-8. 2)Rs 3.9 lakhs - AMC for Online Emission & Effluent Quality Monitoring System. 3)Rs Rs 1 Crores – Diversion of positive discharge of treated effluent line from old to new MIDC chamber.
	c.	Benefit cost ratio/Internal rate of Return and the year of assessment	
	d.	Whether (c) includes the Cost of environmental management as shown in the above.	Yes
	e.	Actual expenditure incurred on the project so far.	
	f.	Actual expenditure incurred on the environmental management plans so far	
10		Forest land requirement	
	a.	The status of approval for diversion of forest land for non-forestry use	NA, (MIDC Land)
	b	The status of compensatory afforestation program in the light of actual field experience so far	NA, (MIDC Land)
11		The status of clear felling in Non-forest areas (such as submergence area of reservoir, approach roads), it any with quantitative information	NA, (MIDC Land)
12		Status of construction	
	a.	Date of commencement (Actual and/or planned)	Year 2013
	b.	Date of completion (Actual and/of planned)	Year 2017
13		Reasons for the delay if the Project is yet to start	NA
14		Dates of site visits	
	a.	The dates on which the project was monitored by the Regional Office on previous Occasions, if any	NA
	b.	Date of site visit for this monitoring report	NA
15		Details of correspondence with Project authorities for obtaining Action plans/information on Status of compliance to safeguards Other than the routine letters for Logistic support for site visits)	NA

EXECUTIVE SUMMARY

1. Introduction

The Deepak Group of Industries came in to existence during 1970's when Mr. C.K. Mehta set up Deepak Nitrite Ltd. In 1983, Deepak Fertilizers and Petrochemicals Corporation Limited (DFPCL) started commercial production of ammonia (in technical collaboration with Fish International Engineers (USA), using natural gas as feed stock. This marked the fulfillment of a need for lateral integration into the world of basic building block chemicals, premium fertilizers and petrochemicals. At that time, this was India's only merchant ammonia manufacturer. The International Finance Corporation initially supported this venture of Deepak group in the form of equity participation in DFPCL.

The company undertook major expansion and diversification in 1989 to achieve forward integration of Ammonia and diversification in Methanol.

In July 1992, DFPCL commenced commercial production of Low Density Ammonium Nitrate (LDAN), Nitro Phosphate (NP) Dilute Nitric Acid (DNA), and Concentrated Nitric Acid (CNA). This has resulted in a multi-product portfolio for DFPCL consisting of chemicals, petrochemicals, fertilizers and other agri-inputs. To ensure an uninterrupted supply of natural gas to its plant, DFPCL laid its own 43 km gas pipeline from the coastal fall point of Bombay High to its plants in Taloja, thus becoming one of the first companies in India to have its own gas pipeline.

DFPCL has a chemical storage terminal at Jawaharlal Nehru Port Trust (JNPT) to provide support to its logistics management system and ensure a window to the world trade in chemicals. It is in the process of adding new storage facilities for Ammonia, Methanol and other products. The company also leases port storage capacities at Bombay Port Trust and Visakhapatnam. In year 2012-13, DFPCL clocked Turnover of Rs. 2500 Crore.

Now, DFPCL proposed the expansion of complex fertiliser unit from 3,24,000 MTPA of Single Grades of ANP to 6,00,000 MTPA of Multiple Grades NPK Fertilizers at its Taloja facilities in Notified Industrial Estate of MIDC, Maharashtra.

2. Project Description

The salient features of the proposed project are given in the **Table 1.**

Table 1: Salient Features of the Project

S.No.	Items	Details
1.	Name of Project	Expansion of NPK fertilizer manufacturing capacity with the purpose of manufacturing multiple grades of NPK
2.	Name of Organization	Deepak Fertilisers & Petrochemicals Corporation

S.No.	Items	Details
		Limited.
3.	Project Location & Land acquired	Plot no K1 to K5, MIDC, Taloja, Dist. Raigad. Being a Brown field expansion, no additional land acquisition is required
4.	Total DFPCL Plant Area	96 Acres (Plant Area) 16 Acres (Green cover)
5.	Area allotted for the proposed expansion	10000 m^2. No additional land requirement as plant shall be built in the area occupied by godowns presently.
6.	Nearby features	DFPCL complex is located in MIDC, Chemical Zone Nearest Highways : 5 Kms Railways : 3.5 Kms Airport : 45 Kms Port : Mumbai, 40 kms Nearest City : Panvel 15 Kms Nearest Forest – No Forest area Sensitive place – Nil Historical place - Nil
7.	Power requirement & source	DFPCL has its gas based power plant of 17.9 MW. 10 MW is taken from MSEDCL .Additional 5 MW requirement for proposed expansion shall be taken from MSEDCL. Approval for additional power is received from MSETCL.
8.	Power backup (DG Sets)	Construction phase: Power required for construction shall be supplied from internal power source. Operation phase : 500 KVA emergency back up DG for lighting purpose.
9.	ETP Facility	ETP Capacity : 5000 M^3/Day(Includes Industrial & Domestic) Quantity of effluent treated in ETP : 3800 M^3/Day
10.	End Product	Multiple grades of NPK fertilizer
11.	Annual Production (MT)	Present : 3,24,900 MTPA (NP) After Expansion : 6,00,000 MTPA (NPK)
12.	Proposed facilities	Main Process plant, new bagging plant Raw Material Storage and Handling facilities, Waste Water Recycle unit , 100 KV sub-station.
13.	Annual stream hours	6600 Hrs
14.	Manpower requirement	No additional manpower. Requirement shall be met from within existing manpower.
15.	Project Time schedule	126 Weeks
16.	Indicative Annual Reqmt. of Raw material	
	A. Ammonia	<= 150 MTPD
	B. Phosphoric acid	<= 325 MTPD

S.No.	Items	Details
	C. Clay (filler)	<= 150 MTPD
	D. Zinc sulphate	<= 15 MTPD
	E. Borax	<= 15MTPD
	F. MOP/K_2SO_4	<= 550MTPD
	G. Sulphuric acid	<= 10 MTPD
17.	Raw Water	Total water required 550 m^3/day. As part of this project DFPCL shall install water recycle unit to treat present effluent. Reject from this unit shall be used in the process. No additional fresh water requirement is envisaged for the complex due to this project.
18.	Project capital cost (Rs. Crores)	360.0
19.	Capital cost (Rs. Crores) for environmental protection measures	Approx 20.0 water recycle unit. Approx 20.0 process scrubbers.
20.	Proposed Air Pollution Control measures	A wet scrubber unit shall be integrated with main process to meet environment norms of dust & ammonia.
21.	Solid / hazardous waste management & waste	No process solid waste generation envisaged from the expansion project. Machine Lube oil waste shall be generated which is already consented. No increase in consented quantity envisaged.

A typical composition/specification of all the raw material required is listed as below:

Ammonia

State :	Liquid
NH_3 Content :	99+/- 0.5% w/w min
H_2O Content :	0.5 % w/w max
Oil Content :	10 ppm max

Phosphoric Acid

P_2O_5 :	52-54% Wt
H_2SO_4 (as SO_4) :	0.5 to 2.5%
CaO :	0.05 to 0.25 % wt
Al_2O_3 :	0.3 to 1.5% wt
Fe_2O_3	0.2 to 1.5% wt
R_2O_3 (Al_2O_3+Fe_2O_3) :	3.0% Max
F :	0.3 to 0.7 % wt
MgO :	0.4 to 1.2 % wt
Cl :	250 ppm

running North-South direction. The eastern horizon is marked by Sahyadri hills. In the western direction a steep slope dropping from 869 m at Raigad to 3 m above M.S.L.

3.2 Geology

The entire district is covered by basaltic lava flows known as "Deccan Traps". These Deccan Traps are capped by laterites. The Recent, Sub-Recent and Pleistocene laterites are observed within the study area.

3.3 Hydrology

The drainage system of the district may be divided in to three groups as follows:

Northern region	: Drained by river Panvel, Ulhas, Patalganga and Amba.
Central region	: Drained by Kundalika and Mandad
South region	: Savitri and its tributaries

The peculiarities of the drainage system of the district are that all rivers are Westerly following. A small river (Kasardi River), which is non-perennial in nature, flow along the Taloja Industrial Area and finally drains into the Arabian Sea.

3.4 Hydrogeology

The requirements of water for irrigation and the domestic purposes, are fulfilled by the groundwater. The groundwater occurs in weathered mantle, fractures and joints in Deccan trap. The depth of wells ranges between 3.50 to 8.50 m bgl. The surface water level in winter ranges between 1 to 3.50 m and in summer ranges between 4 to 8.00 m. Majority of the wells goes dry in the summer season due to poor productive aquifer. The yield of the wells tapping in the trap is poor to moderate. Wells are mainly used for seasonal crops. The depth of the wells ranges from 3.50 to 7.00 m bgl.

3.5 Soil Quality

The texture of the soil was found to be sandy clay and loam respectively. The pH of the soil samples was in the range of 6.8 to 7.4, which show that the soil is near neutral in nature. The available Sodium, Calcium and Potassium, varied from 20 to 836 mg/g, 98 to 257 mg/g and 11 to 87 mg/g respectively, which signify that the soil has significant nutrient value. The Sodium Adsorption Ratio (SAR) is less than 5.6 for all the soil samples, hence, the soil is non-saline in nature.

3.6 Land Use Land Cover

The land use land cover map for the study area was prepared by processing LANDSAT TM satellite imagery with 30 × 30 m resolution, March 2013

The Study Area is covered by 38.5% of built-up in which industries are in majority. Next to built-up area, agricultural land and shrub land which covers 20.1% and 7.5% of area respectively. The study area consist of 8.2% water bodies and it includes

major rivers like Kasardi River and Taloje river and it drains out to Arabian Sea. Overall 14.4 % of barren land is present in the study area; it also includes bare exposed rock in mountainous area. The elevated hilly area consists of 11.3% of Forest.

3.7 Water Quality

The Surface Water Monitoring was conducted for studying the various parameters in three different locations within the study area, namely Kasardi River, Valap Gaon and New Panvel. The pH range varies from 7.0 to 7.2 and all other parameters are well within the limits. Hence, the water is devoid of any pollution.

The ground water quality monitoring was carried out to study the various physic-chemical characteristics of water in six different locations within the study area, namely Pale Bhudrug, Valap Gaon, Taloje Majkur, New Panvel, Existing Plant and Temboda Village. The pH range varies from 6.5 to 7.7 and TDS value varies from 253 to 360 mg/l. All parameters were found to be within the drinking water standards (IS 10500-1991). Hence, the ground water is not polluted.

3.8 Climate of Taloja

The climate of Taloja is typical of that on the west coast of India, with plentiful and regular seasonable rainfall, oppressive weather in the hot months and high humidifies throughout the year. The summer season from March to May is followed by the south-west monsoon season from June to September. October and November form the post-monsoon or the retreating monsoon season. The period from January to March is the cold season. The weather of Raigad is influenced by the proximity to seaside.

The analysis of the average wind pattern (during winter season January to March 2013) shows predominant winds blowing from SW and SE. The calm wind (wind speed < 0.5 m/s) conditions prevailed for 2.23 % of the total time.

3.9 Ambient Air Quality

Six sampling stations were chosen for monitoring of ambient air quality within the study area. These were within 10 km from proposed expansion locations. Three of the locations were situated in the predominant wind direction (South West and South East) as per the Windrose.

The air quality parameters like PM10, PM2.5, SO2, NOX, CO, NH3, VOC and HC are monitored out of which PM10, PM2.5, SO2, NOX, CO and NH3 are listed in the NAAQ standard 2009 and are found to be within the permissible limits of prescribed standards. The 24-hourly average PM10 level varied between 39.05 μg/m3 to 48.25 μg/m3. The 24-hourly average PM2.5 level varied between 7.81 μg/m3 to 9.65 μg/m3. The mean of 24-hourly average values of SO2 over the study area was varying between 3.1 μg/m3 to 4.15 μg/m3. The mean of 24-hourly NOx level over the entire study area was varying between 18.85 μg/m3 to 22.85 μg/m3. Air samples for Carbon

Monoxide, Volatile Organic Carbon and Ammonia were collected from six different sites within the study area and details result is given in the report.

3.10 Noise

Ambient noise monitoring was conducted to assess the background noise levels in the study area. Six locations within the study were selected for the measurement of ambient noise levels. Noise monitoring was carried out on a 24-hour basis to assess the baseline noise-levels and to evaluate the impact.

The values of noise level, which are recorded lies between 50.32-70.04 dB (A) at day time and 39.75-58.94 (A) at night time. The noise level in the daytime as well as in night time were found to be within the permissible limit although the noise levels at N1, N2 are slightly high in the day & night time because of the industrial activities taking place in the area. The day equivalent and night equivalent values observed for all the locations are within the noise standards specified by CPCB.

3.11 Biological Environment

The list of flora and fauna present in the project area are given in **Table 2** and **3**.

Table 2: Comprehensive List of Plant Species

S. No.	Scientific Name	Local Name
Tree		
1.	*Azadirachta indica*	Neem
2.	*Neolamarckia cadamba*	Kadam
3.	*Cocos nucifera*	Narial
4.	*Santalum album*	Chandan
5.	*Terminalia arjuna*	Arjun
6.	*Polyalthia pendula*	Ashoka
7.	*Tectona grandis*	Sagun
8.	*Terminalia catappa*	Badam
9.	*Ficus religiosa*	Peepal
10.	*Mangifera indica*	Aam
11.	*Syzygium cumini*	Jamun
12.	*Tectona grandis*	Sagun
13.	*Artocarpus heterophyllus*	Jackfruit
14.	*Acacia arabica*	Babul
15.	*Zizyphus jujuba*	Ber
16.	*Psidium sp.*	Guava
17.	*Acacia arabica*	Bakul
21.	*Aegle marmelos*	Bel
22.	*Acacia catechu*	Khair
Shrubs		
1.	*Sida cordifolia*	Bala
2	*Macaranga peltata*	Macaranga

8 ENVIRONMENTAL MANAGEMENT PLAN

8.1 STRUCTURE OF EMP

The purpose of the Environmental Management Plant (EMP) is to minimize the potential environmental impacts from the project and to mitigate the consequences. EMP reflects the commitment of the project management to protect the environment as well as the neighbouring populations. The potential environmental impact envisaged from the project is studied on for the different environmental components.

The management action plan also aims at controlling pollution at the source level to the possible extent with the available and affordable technology followed by treatment measures before they are discharged. Therefore, the additional mitigation measures are recommended in order to synchronize the economic development of the study area with the environmental protection of the region.

Environmental Management Plan (EMP) is the key to ensure a safe and clean environment. The desired results from the environmental mitigation measures proposed in the project may not be obtained without a management plan to assure its proper implementation and function. The EMP envisages the plans for the proper implementation of mitigation measures to reduce the adverse impacts arising out of the project activities. EMP has been prepared addressing the issues like:

- Pollution control/mitigation measures for abatement for the undesirable impacts caused during the construction and operation stages.
- Details of management plans (Landscape plan, storm water management plan, sewage management plan, effluent management plan, hazardous waste management plan etc.).
- Institutional set up identified/recommended for implementation of the EMP.
- Post project environmental monitoring programme to be undertaken (Chapter 5).
- Expenditures for environmental protection measures and budget for EMP.

8.2 PROPOSED ENVIRONMENTAL MITIGATION MEASURES

Preparation of Environmental Management Plan is required for formulation and monitoring of environmental protection measures during construction and operation of proposed plant. The plan should indicate the details as to how various measures proposed to be taken for mitigation of adverse impacts if any from the proposed project.

The following sections describe the Environmental Management Plan for proposed NPK Plant during construction and post construction phases.

Construction Phase

The construction activity includes the handling of the construction material and equipment, vehicular movement etc.

The major culprit during any construction activity is the fugitive emission that is released from the construction activity and the vehicular movement during the construction. Dust control is a major issue during the construction phase along with the waste water generated from the construction and the domestic sewage generated by the construction camp, oil and material spillages during the handling and the transportation of the construction material and the solid waste generated during the construction.

Dust suppression is achieved by spraying water on the unpaved roads and covering the trucks transporting the construction material with tarpaulin or other covers and taking steps to minimize spillages during the transport and the handling of the material.

Noise effect on the nearby habitation during construction activities will be negligible as the nearest habitat is more than 1 km from the plant. However, construction labour would be provided with noise protection devises like ear muffs, and occupational safety ware. It is recommended that all noise generating equipment to be stopped during night timings.

The waste oil generated by construction equipment would be disposed through authorized recyclers and unauthorized dumping of waste oil is prohibited.

Adequate security arrangement should be made to ensure that the local inhabitants and the stray cattle are not exposed to the potential hazards of construction activities.

The details of the impacts resulting due to different activities during construction are tabulated below phases are given in Chapter 5. Based on these mitigation measures, Environmental Management Plan (EMP) is drafted. The environmental mitigation measures for construction phases are briefly listed in **Table 8.1**.

Table 8.1: Proposed Environmental Mitigation Measures

S. No.	Component	Impact	Mitigation Measures
Construction Phase:			
1.	Air	Generation of Dust, CO_2, SO_X, NO_x (Short term for a period of 6 months and Local)	• Covering of construction material with sheets while transportation and storage. • Use of water sprinklers. • Personal Protective equipment for labours. • Project site is inside the existing industrial complex. No impact on general public.
2.	Noise and Vibration	• Increase in the noise levels due to movement of vehicles and construction activities. • Vibration due to movement of vehicles and construction activities. (Short term for a period of 6 months and Local)	• Proper service and maintenance of machines and vehicles to control noise. • Personal protective equipments for labours. • The impact due to vibration will be insignificant. • Project site is inside the existing industrial complex. No impact on general public.

S. No.	Component	Impact	Mitigation Measures
3.	Water	• Water pollution due to disposal of sewage will be curtailed with the existing effluent treatment plant. (Short term, Minor, Local)	• Proper sanitation facilities in the construction site • Treatment of sewage in existing ETP having a capacity of 5040 KLD within DFPCL premises .This is a design capacity for 12000 persons. Presently only 6000 people are using the facility.
4.	Land	• Removal of top soil and change in soil quality. • Soil pollution due to discharge of sewage and solid waste onto land will be curtailed with the existing effluent treatment plant. • No change in Land use pattern as project site is inside the existing industrial complex. (Minor and Local)	• Use of removed soil for landscaping purposes, improving aesthetics. • Sanitation facilities in the construction site as well as labour camps. • Treatment and disposal of sewage and solid waste as per MPCB guidelines.
5.	Biological • Flora • Fauna	• Disturbance due to increase in noise. (Short term, Minor and Local)	• Green belt development.
6.	Socio-Economic	• Employment of construction workers (Direct, Positive)	• People from the study area to be employed as far as possible
7.	Occupational Health and Safety	• Auditory ailment due to noise will be prevented. • Dust emission (Short term, Minor and Local	• The use of personal protective equipments will be made stringent. • Water sprinkling system for dust generating area.
Operation Phase: Project authorities (DFPCL) are planning to implement several measures to curtail pollution to the maximum extent. Environment management at design stage includes all the steps undertaken at the design stage by the project proponents to meet the statutory requirements and towards minimizing environmental impacts. The design basis for all process units will lay special emphasis on measures to minimize effluent generation and emission control at source. The specific control measures related to gaseous emissions, liquid effluent discharges, noise generation, solid waste disposal etc. are described below :			
1.	Air	• Increase in the air pollutant concentration will be addressed using cyclonic Separators and Venturi scrubbers	• Use of cyclonic Separators and Venturi scrubbers to control dust and fugitive emissions within the limits of MPCB regulations • Personal protective equipments

S. No.	Component	Impact	Mitigation Measures
		• Dust generation possibility is minimum as raw materials handled are liquids and product will be bagged in the existing bagging plant (Direct,Local,sustainable)	for labours. • Strict implementation of Hazardous Waste Rules Act 1989, while storage/handling/transportation of hazardous substances. • Regular monitoring of emissions. Provide high efficiency scrubbers.
2.	Noise and Vibration	• Increase in the noise levels will be minimised by using Equipments with noise level below 80db • Vibration during operation of manufacturing unit. (Direct, Minor, Local, sustainable)	• Equipments with noise level below 80db only will be used. • Proper service and maintenance of machines to control noise. • Personal protective equipments for employees like anti vibration gloves and ear plugs. • Project site is inside the existing industrial complex. No impact on general public. • By selecting low noise prone equipment • By isolating the noise prone unit from the working personnel's continuous exposure • By administrative control The administrative control would have a major role to monitor noise, take remedial measures and ensure that no plant personnel are over exposed to noise. • The use of damping material such as thin rubber/lead sheet for wrapping the work places like turbine halls, compressor rooms etc; • Shock absorbing techniques should be adopted to reduce vibration impact; • Efficient flow techniques for noise associated with high fluid velocities and turbulence should be used (like reduction in noise generated by control levels in both gas and liquid systems achieved by reducing system pressure to as low as possible); • All the openings like covers, partitions should be acoustically sealed;

S. No.	Component	Impact	Mitigation Measures
			• Inlet and outlet mufflers should be provided which are easy to design and construct; • Ear plugs will be provided to workmen working near high noise generating sources; • Noise levels should be reduced by the use of absorbing material on roof walls and floors; • Provision of separate cabins for workers/operators
3.	Water	• Insignificant on groundwater. • Degradation of quality due to discharge of sewage and untreated water will be prevented. • Discharge of effluent from the manufacturing unit. (Indirect, Negative, Minor, Local, sustainable)	• Proper sanitation facilities in the plant area. • Treatment of wastewater in existing ETP within DFPCL area. • The effluent generated from the manufacturing unit will be reused for dilution of phosphoric and sulphuric acids. Effluent discharge, if any due to cooling tower blow down, domestic effluent etc shall be treated in the proposed RO with a capacity of 550 m^3/hr. There will be no generation of effluent from the proposed project.
4.	Land	• Pollution due to discharge of sewage waste will be prevented. • Dust generation possibility is minimum as raw materials handled are liquids and product will be bagged in the existing bagging plant (Direct,Negative,Minor ,Local,sustainable)	• Proper sanitation facilities in the plant area. • Proper treatment and disposal of sewage and solid waste to CETP as per the guidelines of MPCB in existing ETP within DFPCL premises. This has a design capacity for 1200 persons. Presently only 600 people are using the facility.
5.	Biological • Flora • Fauna	• Disturbance due to increase in noise. (Minor,Direct,Local ,sustainable)	• Operational activities of heavy machineries and transportation only in daytime. • Green belt development.
6.	Socio-Economic	Employment to local people (Positive, Local)	• People from the local area to be employed as far as possible
7.	Occupational Health and Safety	• Auditory ailment due to noise generated from the production unit will be minimised by using Equipments with noise level below 80db	• Equipments with noise level below 80db only will be used. • Wearing of personal protective equipments like gas masks, ear muffs etc. will be strictly enforced.

S. No.	Component	Impact	Mitigation Measures
		• Accidents due to handling/storage/ transportation of hazardous materials. (Local and sustainable)	• Training/awareness programme about the handling / storage / transportation of hazardous materials. • Signage's showing the hazardous nature and the method of handling near storage / handling area of all the hazardous materials. • First aid training for chemical /fire hazard related accidents.

8.3 ENVIRONMENTAL MANAGEMENT PLANS

8.3.1 Rainwater Harvesting System

Rainwater harvesting system was not installed in past as ground water table is high. However, DFPCL is making rooftop water collecting system. Reservoir for rainwater is ready. Connecting pipelines are being laid. System shall be ready before 2014 monsoon. For proposed plant there shall be separate rooftop collection system.

8.3.2 Air Pollution Management Plan

In the manufacturing process, dust is emanated from the cooler and dryer compartments. The dust laden air originating from cooler and dryer compartments are treated separately.

A series of gas scrubber connected to the different equipments for a double purpose will be used: to retain as much as possible all recoverable products, and to minimize emissions (especially ammonia, fertilizer dust and fluorine) to the atmosphere. The scrubbing liquid will be diluted phosphoric / sulphuric acids or water, depending on the scrubber. The scrubbing system has a first scrubbing step composed of a Venturi-Type fume prescrubbing for the granulator. The prescrubbing liquid is the result of mixing fresh phosphoric acid and sulphuric acid with scrubbing liquid coming from scrubber tank. From the granulator prescrubber, the liquid is sent to the pipe reactor tank, where the concentration of P_2O_5 required for feeding the Pipe Reactor is adjusted with additional fresh concentrated phosphoric acid. The prescrubbing step objective is to retain most of the ammonia and dust leaving from the granulator.

Occasional additions of sulphuric acid can be done to the scrubber tank. The gases coming out of the prescrubber will be sent to the ventury type scrubber, where they are using as scrubbing liquid fresh phosacid diluted with the slightly polluted water coming from tail gas scrubber. The objective of this scrubber is to complete the recovery of ammonia and dust. From the same common tank the scrubbing liquid is also recirculated to the venture dryer scrubber, where the dust which has been not retained by the dryer cyclones is recovered; and the venture cooler and dedusting scrubber where a part of the gases coming out from the cooler cyclones are jointly washed with the dedusting gases coming from cyclones.

It is recommended to install final scrubber (packed column) for final scrubbing. All exhaust gases from the above scrubber shall be sent to the final washing step: the Tail Gas Scrubber,

which shall include a multi-spraying system in the horizontal feeding arm and a packed section in the vertical tower. Gases are washed with water, to avoid the fluorine emissions created during phosphoric acid washing, as well as to recover dust and NH_3. The first washing consists of a duct multi-spraying system and uses the water advanced from the second one. A pH controlling system, using sulphuric acid as acidic media, assures the best pH to achieve both ammonia and fluorine recovery. The second step includes a packed section, to efficiently complete the dust, ammonia and fluorine removal. Scrubbing liquid is basically composed of water, which is sprayed on top of the packing. Scrubbed liquor shall be re-circulated to the process.

Gases, after washing, are finally released to the atmosphere through a common stack. The last section of TGS is equipped with a demister to avoid droplet entrainment. The liquid from the tail gas will contain water, a small quantity of ammonia, fertilizer dust and fluorine retained during the scrubbing. This liquid will be recovered into the scrubber tank; where with the addition of phosphoric acid will constitute the scrubbing liquid. The process flow diagram for dust and other gases scrubbing is shown in **Figure 8.1**.

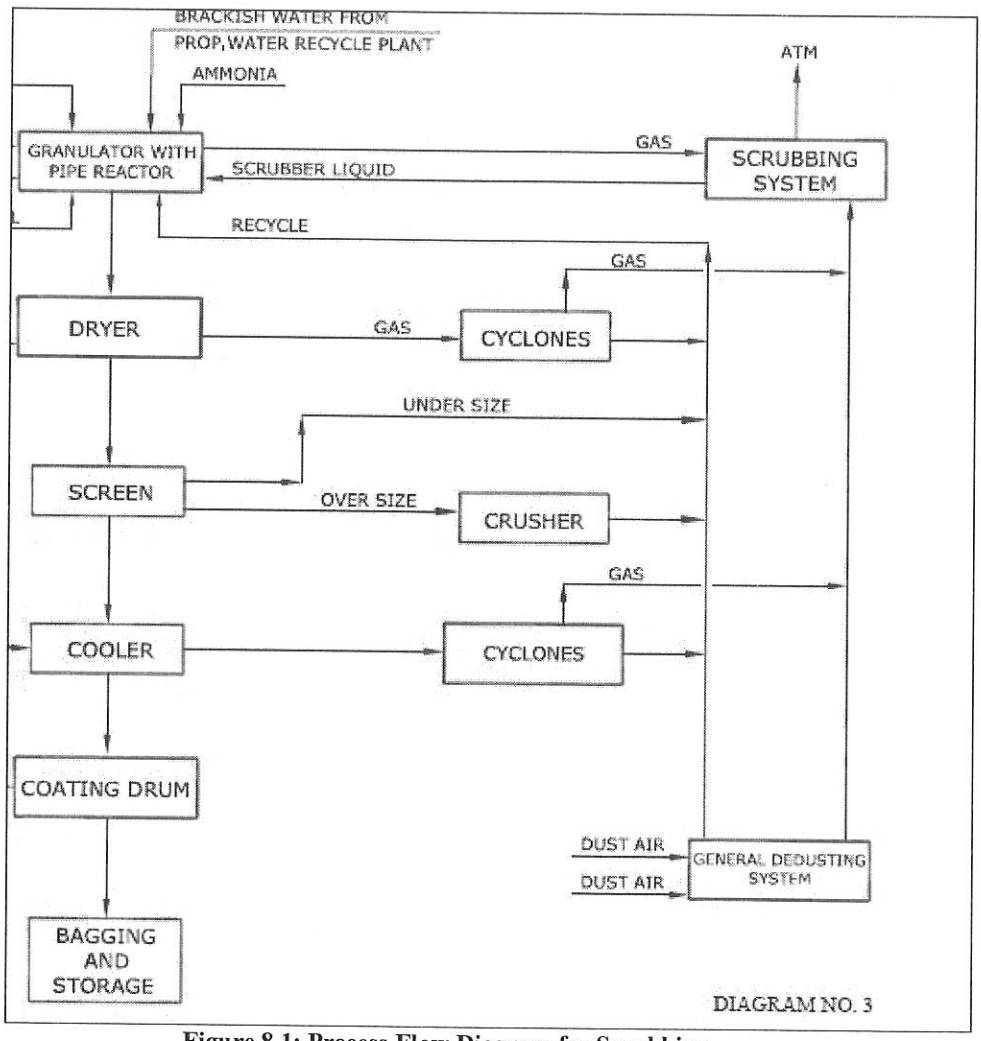

Figure 8.1: Process Flow Diagram for Scrubbing

8.3.3 Storm Water Management Plan

DFPCL plant area already has a storm water drainage system. It is made up of partially covered drains with brick masonry work. The outlet of the storm water drainage is connected with the Kasardi River.

8.3.4 Sewage Management Plan

Around 1-2 m^3/h of domestic effluent is expected to be generated during the construction and operation phases. The generated sewage will be collected and the waste water will be treated in the ETP of capacity 5000 KLPD.

8.3.5 Effluent Management Plan

The wastewater generated during the maintenance of the expansion unit like cleaning/ servicing, will be treated in the proposed RO system of 550 m^3/Day capacity. The proposed unit shall be designed for zero liquid effluent discharge. Reject of RO shall be recycled to NPK unit. Treated effluent from RO shall be used in the cooling tower make up & domestic

use. The proposed NPK Granulation project will reduce overall effluent discharge by approx. 450 m^3/day i.e. by 12% & New project will not require additional fresh water. Thus proposed project will result in conservation of natural resources and green environment. **Figure 8.2** shows the Effluent reduction flow chart for the proposed NPK effluent treatment process and **Figure: 8.3** Water balance of the entire complex including the proposed NPK Plant.

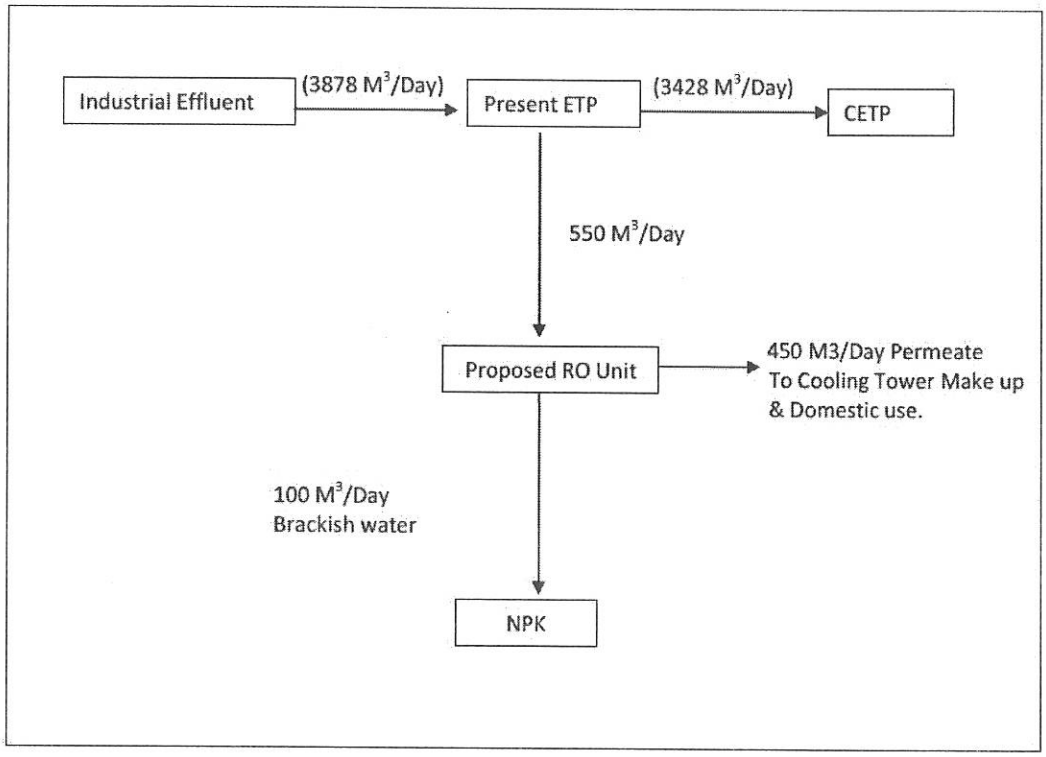

Figure 8.2: Effluent Reduction flowchart for the Proposed Unit

Environment Clearance for NPK Fertilizer Manufacturing Unit 6 Lakhs MTPA dated 12.10.2015 C F NO J-11011/320/2012-IA II(I) Government of India, Ministry of Environment, Forest and Climate Change (I.A. Division), Indira Paryavaran Bhawan, Aliganj, Jorbagh Road, New Delhi - 110003.		
SN	**Specific Conditions**	**Status of compliance as on 31/03/2020**
i)	All the conditions stipulated in environmental clearance J-11 011/218/2004-IA (II) dated 24th February, 2006 and SEAC-2010/CR.656/TC.2 dated 11th May, 2011 accorded for the existing projects shall be implemented.	Conditions stipulated in the environment clearance of IPA & GT 3,4 &5 are complied with. Six monthly status on their compliance is sent to MOEF, last such report was sent on 30th November 2019.
ii)	The project proponent shall follow guidelines and policies of the State Government w.r.t. The river regulation zone for conservation of river. State Pollution Control Board shall issue the consent to establish/consent to operate after complying the guidelines for the location of unit from river.	RRZ policy is not applicable to our site.
iii)	Ammonia bearing fumes from the reactor and granulator of the Complex Fertilizer shall be scrubbed. Scrubbing shall have interlocking system with main plant.	Two stage Scrubber is provided for scrubbing of fumes from reactor & granulator with interlock in DCS with main plant.
iv)	Total water requirement should not exceed 2800 m3/day as per permission accorded by MIDC vide letters dated 03.03.04 and 07.07.05. Further, efforts shall be made for further conservation of water and utilization of waste water.	The gaseous emissions PM, Ammonia and Fluoride from NPK plant are within the stipulated limits.NOx is not emitted from NPK stack. Hydrocarbon and SO2 are not emitted from NPK stacks however this is also monitored through MOEF approved third party laboratory in ambient air. As per the recent guidelines from CPCB actions have been installed the sensors for PM, Fluoride and Ammonia and these are hooked up to MPCB & CPCB portal . Stack emissions are monitored quarterly through MOEF approved third party laboratories. Three continuous monitoring AAQM stations installed and connected to MPCB porta these stations monitor various parameter like PM10, PM2.5 etc are installed and operational as per NAAQMS norms. All care is taken to keep the pollution control devices operational. All the parameters are also periodically through MoEF approved third party lab. **(Annexure - 1)**
v)	Ambient air quality data shall be collected as per NAAQES standards notified by the the Ministry vide G.S.R. No. 826(E) dated 16th September, 2009. The levels of PM10 (Urea dust), SO2, NOx; Ammonia, Ozone and HC shall be monitored in the ambient air and displayed at a convenient location near the main gate of the company and at important public places. The company shall upload the results of monitored data on its website and shall update the same periodically. It shall simultaneously be sent to the Regional Office of MOEF, the respective Zonal office of CPCB and the Maharashtra Pollution Control Board (MPCB), Calibration of continuous ambient air quality monitoring stations shall be conducted quarterly.	Three continuous monitoring AAQM stations connected MPCB portal. These station monitors various parameters like PM10 & PM 2.5, SO2, NOx & NH3 & CO. The results of the monitoring are displayed near main gate of the company. These are also uploaded on the company's website. Six monthly reports are also seen to regional office of MOEF & MPCB. Calibration of continuous ambient air quality monitoring stations is conducted quarterly. Ozone and hydrocarbon are monitored through the MOEF approved third party by sampling.

SN	Specific Conditions	Status of compliance as on 31/03/2020
vi)	In plant control measures for checking fugitive emissions from all the vulnerable sources shall be provided. Fugitive emissions shall be controlled by providing closed storage, closed handling & conveyance of chemicals / materials, multi cyclone separator and water sprinkling system. Fugitive emissions in the work zone environment, product, raw materials storage area etc. shall be regularly monitored. The emissions should conform to the limits stipulated by the MPCB.	In NPK plant all the chemicals are stored in closed containers and transferred through the pipelines. Solid raw material is handled through bucket elevators. Fugitive emissions in the work zone environment and storage area is monitored periodically through the MOEF approved third party laboratory and these are within the stipulated norms.
vii)	The gaseous emissions from DG set shall be dispersed through adequate stack height as per CPCB standards. Acoustic enclosure shall be provided to the DG sets to mitigate the noise pollution.	The gaseous emission from DG sets is dispersed through adequate stack height and acoustic enclosure has been provided.
viii)	Unit shall never store ammonia more than 10,000 Ton at the site. If eventuality arises and it needs to be emptied, the additional 3000 T ammonia storage to be kept standby and the rest of NH3 to be transported to JNPT site, where they store Imported ammonia.	Noted.
ix)	Total water requirement shall not exceed 500 m3/day for the proposed unit and met from treated / recycled water.	Complied.
x)	Industrial effluent shall be treated in effluent treatment plant (ETP) and recycled back in the process	Complied.
xi)	No effluent shall be discharged outside the premises and 'Zero' effluent discharge shall be ensured.	We have developed better method of utilization of the RO by processing MIDC RW, this has reduced inlet effluent to ETP by more than 600 m3/day thus meeting requirements of recycling 500 m3/day and 100 m3/day Treated effluent. Treated effluent of 100 m3/day is utilized in the NPK process.
xii)	Process effluent/any wastewater shall not be allowed to mix with storm water. Storm water drain shall be passed through guard pond.	There are separate drains for process effluent and storm water. Pond has been provided for the storm water drain.
xiii)	All the effluents after treatment shall be routed to a properly lined· guard pond for equalization and final control. In the guard pond, automatic monitoring system (24x7) for flow, and relevant pollutants (i.e. pH, ammoniacal nitrogen, nitrate nitrogen etc.) shall be provided with high level alarm system. Monitoring Data to be provided to respective Regional Office of the MoEF and Company's website.	Total treated effluent is equalized for final control in a RCC tank. Automatic continuous monitoring system for flow and relevant pollutants that is pH, ammoniacal nitrogen, nitrate nitrogen, BOD, COD, TSS and Fluoride are provided and these are connected to MPCB & CPCB portals. High level alarm systems has been provided to these equalisation tanks.

SN	Specific Conditions	Status of compliance as on 31/03/2020
xiv)	Regular monitoring of ground water by installing piezometric wells around the guard pond and sludge disposal sites shall be periodically monitored and report shall be submitted to the concerned Regional Office of the Ministry, CPCB and SPCB	Ground water montoring report is submitted to Regional office MOEF,CPCB and MPCB.
xv)	The company shall construct the garland drain all around the project site to prevent runoff of any chemicals containing waste into the nearby water bodies. Effluent shall be properly treated and treated wastewater shall conform to CPCB standards	Garland drain has been constructed all around the project site to prevent runoff of any chemicals containing waste into the nearby water bodies. The effluent is treated in ETP ensuring compliance with prescribed parameters.
xvi)	The company shall obtain Authorization for collection, storage and disposal of hazardous waste under the Hazardous Waste (Management, Handling and Trans-Boundary Movement) Rules, 2008 and amended as on date for management of Hazardous wastes. Measures shall be taken for fire fighting facilities in case of emergency.	Consent to operate comprises of HW requirements. Fire detection, fire protection and fire fighting arrangements have been provided in manufacturing process and in material handling areas. Company has a dedicated fire team and regular mock drills are conducted. Company also has two fire tenders.
xvii)	Spent catalysts and used oil shall be sold to authorized recyclers/re-processors only	There is no catalysts used in NPK plant and used oil is sold to authorized recyclers/re-processors only.
xviii)	The Company shall strictly comply with the rules and guidelines under Manufacture, Storage and Import of Hazardous Chemicals (MSIHC) Rules, 1989 as amended time to time. All Transportation of Hazardous Chemicals shall be as per the Motor Vehicle Act (MVA), 1989	MSIHC rules are followed strictly, All Transportation of Hazardous Chemicals is as per the Motor Vehicle Act (MVA), 1989.
xix)	Remote operated valve placed on NH3 line to avoid leakage/equipment check shall be performed to ensure that remote operated valve (ROV) is all time is functional.	Remote operated valve is installed on NH3 line. Equipment checks are performed to avoid the leakages remote operated valve is all time functional.
xx)	The company shall strictly follow all the recommendations mentioned in the Charter on Corporate Responsibility for Environmental Protection (CREP).	Recommendations mentioned in CREP are followed.
xxi)	The unit shall make the arrangement for protection of possible fire hazards during manufacturing process in material handling. Fire fighting system shall be as per the OISD 117 norms.	Adequate Fire fighting system has been provided as per the TAC norms which is inspected as per the Maharashtra Fire and Life Safety Measures Act. Inspection Report in Form B will be submitted in January and July every year to Director - Maharashtra Fire Services.
xxii)	Occupational health surveillance of the workers should be done on a regular basis and records maintained as per the Factories Act.	Six monthly periodic medical check-up is carried out of all workers and records are maintained in Form-7 as per the Factories Act.

SN	Specific Conditions	Status of compliance as on 31/03/2020
xxiii)	Green belt shall be developed in 33 % of the plant area. Selection of plant species shall be as· per the CPCB guidelines.	Complied with. Around 31 % of plot area is developed as Green belt. Addtional MIDC plot next to our premises is being aquired from MIDC to develop green belt which will meet the requirment of 33% green blet. In addition to this, green belt on 50 acre of degraded forest land is also developed at Dhavdi Village, near Dombivali, ~ 12-15 kms away from our site.
xxiv)	Provision shall be made for the housing for the construction Labour within the site with all necessary infrastructure and facilities such as fuel for cooking, mobile toilets, mobile sewage treatment plant, safe drinking water, medical health care, creche etc. The housing may be in the form of temporary structure to be removed after the completion of the project. All the construction wastes shall be managed so that there is no impact on the surrounding environment.	Complied with, residential facility was not needed during the construction phase as the construction labour were local from local areas.
SN	**General Conditions**	**Status of compliance as on 31/03/2020**
i)	The project authorities shall strictly adhere to the stipulations made by the State Government and Maharashtra Pollution Control Board.	Complied with as per CTO.
ii)	No further expansion or modifications in the plant shall be carried out without prior approval of the Ministry of Environment and Forests. In case of deviations or alterations in the project proposal from those submitted to this Ministry for clearance, a fresh reference shall be made to the Ministry to assess the adequacy of conditions imposed and to add additional environmental protection measures required, if any.	Noted.
iii)	The locations of ambient air quality monitoring stations shall be decided in consultation with the State Pollution Control Board (SPCB) and it shall be ensured that at least one stations is installed in the upwind and downwind directions as well as where maximum ground level concentrations are anticipated.	Three continuous monitoring AAQM stations are installed and connected to MPCB portal.
iv)	The overall noise levels in and around the plant area shall be kept well within the standards by providing noise control measures including acoustic hoods, silencers, enclosures etc. on all sources of noise generation. The ambient noise levels shall conform to the standards prescribed under Environment (Protection) Act, 1986 Rules, 1989 viz. 75 dBA (day time) and 70 dBA (night time).	Periodic noise monitoring by third party (MoEF Approved) laboratory is carried out near main gate, IPA gate and ANP gate; and ambient noise level is within the standards prescribed. Acoustic enclosures are provided to DG sets. **(Annexure - 2)**

SN	General Conditions	Status of compliance as on 30/09/19
v)	The Company shall harvest rainwater from the roof tops of the buildings and storm water drains to recharge the ground water and use the same water for the process activities of the project to conserve fresh water.	Rain water harvesting system is provided at WNA 3 & 4 plants.
vi)	Training shall be imparted to all employees on safety and health aspects of chemicals handling. Pre-employment and routine periodical medical examinations for all employees shall be undertaken on regular basis. training to all employees on handling of chemicals shall be imparted.	Training is imparted to all employees on safety and health aspects of chemicals handling. Pre-employment and routine periodical medical examinations for all employees are undertaken on regular basis.
vii)	Usage of Personnel Protection Equipments (PPEs) by all employees / workers shall be ensured.	Complied with.
viii)	The company shall also comply with all the environmental protection measures and safeguards proposed in the documents submitted to the Ministry. All the recommendations made in the EIA/EMP in respect of environmental management, risk mitigation measures and public hearing relating to the project shall be implemented.	Complied with. Environment protection measures and recommendations given in EIA are complied with.
ix)	The company shall undertake all relevant measures for improving the socio-economic conditions of the surrounding area. CSR activities shall be undertaken by involving local villages and administration.	CSR activities are carried out through Ishanya Foundation Trust, set up by the company for rural development, women empowerment, health & education. **(Annexure - 3)**
x)	The company shall undertake eco-developmental measures including community welfare measures in the project area for the overall improvement of the environment.	1. Tree plantation in the MIDC area is carried out. 2. Beautification on the part of Kasardi river near our complex is planned as part of community development. 3. Around 31 % of plot area is developed as Green belt. Addtional MIDC plot next to our premises is being aquired from MIDC to develop green belt which will meet the requirment of 33% green blet. In addition to this, green belt on 50 acre of degraded forest land is also developed at Dhavdi Village which is located near Dombivali which approximately 15 kms away from our site.

SN	General Conditions	Status of compliance as on 31/03/2020
xi)	A separate Environmental Management Cell equipped with full fledged laboratory facilities shall be set up to carry out the Environmental Management and Monitoring functions.	A separate Environmental Management Cell equipped with required facilities is set up.
xii)	As proposed, company shall earmark sufficient funds toward capital cost and recurring cost respectively to implement the conditions stipulated by the Ministry of Environment and Forests as well as the State Government along with the implementation schedule for all the conditions stipulated herein. The funds so earmarked for environment management/ pollution control measures shall not be diverted for any other purpose.	Budget for Environment department for the year 2019-20 was of Rs 16 lacs and for OCEMS was 14 Crores. The fund so earmarked for environment management/ pollution control measures is not diverted for any other purpose.
xiii)	A copy of the clearance letter shall be sent by the project proponent to concerned Panchayat, Zila Parishad/Municipal Corporation, Urban local Body and the local NGO, if any, from who suggestions / representations, if any, were received while processing the proposal.	Complied with. Advertisement for availability of EC copy on MoEF website was published in local newspaper 'Krushiwal' date 21.10.2015 for any suggestions/representations.
xiv)	The project proponent shall also submit six monthly reports on the status of compliance of the stipulated Environmental Clearance conditions including results of monitored data (both in hard copies as well as by e-mail) to the respective Regional Office of MoEF, the respective Zonal Office of CPCB and the Maharashtra Pollution Control Board. A copy of Environmental Clearance and six monthly compliance status report shall be posted on the website of the company.	Six monthly compliance reports are being sent to regional office of MOEF and MPCB. Last report was sent on 30th November 2019. Copy of the same uploaded on the company's web-site.
xv)	The environmental statement for each financial year ending 31 st March in Form-V as is mandated shall be submitted to the concerned State Pollution Control Board as prescribed under the Environment (Protection) Rules, 1986, as amended subsequently, shall also be put on the website of the company along with the status of compliance of environmental clearance conditions and shall also be sent to the respective Regional Offices of MoEF by e-mail.	The environmental statement for each financial year ending 31st March in Form-V as is being submitted online to the MPCB before 30th September. Form V is also being uploaded on company website. (Form V was submitted online on 27.09.2019 for financial year 2018-19).

SN	General Conditions	Status of compliance as on 31/03/2020
xvi)	The project proponent shall inform the public that the project has been accorded environmental clearance by the Ministry and copies of the clearance letter are available with the SPCB/Committee and may also be seen at Website of the Ministry at http://envfor.nic.in. This shall be advertised within seven days from the date of issue of the clearance letter, at least in two local newspapers that are widely circulated in the region of which one shall be in the vernacular language of the locality concerned and a copy of the same shall be forwarded to the concerned Regional Office of the Ministry.	Complied with. Advertisement for availability of EC copy on MoEF website was published in local newspaper 'Krushiwal' date 21.10.2015 for any suggestions/representations.
xvii)	The project authorities shall inform the Regional Office as well as the Ministry, the date of financial closure and final approval of the project by the concerned authorities and the date of start of the project.	Complied with.
xviii)	The Ministry may revoke or suspend the clearance, if implementation of any of the above conditions is not satisfactory.	Complied with.
xvix)	The Ministry reserves the right to stipulate additional conditions , if found necessary. The company in a time bound manner will implement these conditions.	Noted.
xvx)	The above conditions will be enforced, inter alia, under the provisions of the Water (Prevention and Control of Pollution) Act, 1974, the Air (Prevention and Control of Pollution) Act, 1981,the Environment (Protection) Act, 1986 and rules there under, Hazardous Wates (Management, Handling and Transboundary Movement) Rules, 2008 the Public Liability Insurance Act, 1991 along with their amendments and rules.	Noted.

List of Annexures Submitted	
Annexure. No.	Content
1	Stack Monitoring Reports
2	Ambient Noise Monitoring Reports
3	CSR Report

STACK MONITORING REPORT

Name of Organization	: M/s. Deepak Fertilisers And Petrochemicals Corporation Limited.
Customer Address	: Taloja Plant Plot K-1, MIDC Industrial Area, P.O. Taloja Dist. Raigad 410208 Maharashtra
Customer Reference	: Work Order no. 4800055893, Dated 24.07.2019

Date of Sampling	Sample Received Date	Analysis Start Date	Analysis Complete Date	Report on Date
24.10.2019	25.10.2019	25.10.2019	28.10.2019	28.10.2019

Sample Type	: Flue Gas (Stack)	Sampling done by	: Netel (India) Limited
Stack Connected to	: NPK Train-1	Stack Diameter	: 2772 mm
Sampling Location	: NPK Train-1	Sample Code	: NIL/ST/10/19/038

Sr. No.	Parameters	Method	Unit	MDL*	Results	Consent Limits
1	Temperature	IS 11255 (Part 3)	°C	---	57.0	---
2	Velocity of Gas	IS 11255 (Part 3)	m/sec	---	12.2	---
3	Volumetric Flow Rate	IS 11255 (Part 3)	Nm³/hr	---	235039	---
4	Total Particulate Matter	IS 11255 (Part 1)	mg/Nm³	3	18.6	150
			kg/day	---	104.921	---
5	Ammonia	IS 11255 (Part 6)	mg/Nm³	0.05	13.3	---
			ppm	---	19.85	50
			kg/hr	---	4.666	---
6	Fluoride	IS 11255 (Part 5)	mg/Nm³	0.25	BDL	25
			ppm	---	BDL	---
			kg/day	---	BDL	---

Note :

1. * MDL – Minimum Detectible Limit.
2. ** BDL – Below Detectible Limit.
3. This Test Report shall not be reproduced except in full, without written approval of the Laboratory.
4. This Test Report refers only to the sample tested.
5. The Complaint Register is available with the Laboratory as per Environment Protection Act,1986.

Verified by:

Surekha Jamdar
Dy. Technical Manager

Issued by:

Shraddha Kere
Technical Manager

End of Report

STACK MONITORING REPORT

Name of Organization	: M/s. Deepak Fertilisers And Petrochemicals Corporation Limited.
Customer Address	: Taloja Plant Plot K-1, MIDC Industrial Area, P.O. Talcja Dist. Raigad 410208 Maharashtra
Customer Reference	: Work Order no. 4800055893, Dated 24.07.2019

Date of Sampling	Sample Received Date	Analysis Start Date	Analysis Complete Date	Report on Date
24.10.2019	25.10.2019	25.10.2019	28.10.2019	28.10.2019

Sample Type	: Flue Gas (Stack	Sampling done by	: Netel (India) Limited
Stack Connected to	: ANP Cyclone Separator	Stack Diameter	: 1500 mm
Sampling Location	: ANP Dedusting Unit (Cyclone Separator)	Sample Code	: NIL/ST/10/19/039

Sr. No.	Parameters	Method	Unit	MDL*	Results	Consent Limits
1	Temperature	IS 11255 (Part 3)	°C	---	**56.0**	---
2	Velocity of Gas	IS 11255 (Part 3)	m/sec	---	**11.7**	---
3	Volumetric Flow Rate	IS 11255 (Part 3)	Nm^3/hr	---	**63759**	---
4	Total Particulate Matter	IS 11255 (Part 1)	mg/Nm^3	3	**28.8**	150
			kg/day	---	**44.070**	---
1	Ammonia	IS 11255 (Part 6)	mg/Nm^3	0.05	**19.3**	---
			ppm	---	**27.76**	50
			kg/hr	---	**1.770**	---
1	Fluoride	IS 11255 (Part 5)	mg/Nm^3	0.25	**5.6**	25
			ppm	---	**7.21**	---
			kg/day	---	**8.569**	---

Note :

1. * MDL – Minimum Detectible Limit
2. ** BDL – Below Detectible Limit.
3. This Test Report shall not be reproduced except in full, without written approval of the Laboratory.
4. This Test Report refers only to the sample tested.
5. The Complaint Register is available with the Laboratory as per Environment Protection Act,1986.

Verified by:

Surekha Jamdar
Dy. Technical Manager

Issued by:

Shraddha Kere
Technical Manager

End of Report

Netel (India) Limited

STACK MONITORING REPORT

Name of Organization	: M/s. Deepak Fertilisers And Petrochemicals Corporation Limited.
Customer Address	: Taloja Plant Plot K-1, MIDC Industrial Area, P.O. Taloja Dist. Raigad 410208 Maharashtra
Customer Reference	: Work Order no. 4800055893, Dated 24.07.2019

Date of Sampling	Sample Received Date	Analysis Start Date	Analysis Complete Date	Report on Date
24.10.2019	25.10.2019	25.10.2019	28.10.2019	28.10.2019

Sample Type	: Flue Gas (Stack)	Sampling done by	: Netel (India) Limited
Stack Connected to	: ANP Vaccum Pumps	Stack Diameter	: 200 mm
Sampling Location	: ANP Vaccum Pumps	Sample Code	: NIL/ST/ 0/19/040

Sr. No.	Parameters	Method	Unit	MDL*	Results	Consent Limits
1	Temperature	IS 11255 (Part 3)	°C	---	47.0	---
2	Velocity of Gas	IS 11255 (Part 3)	m/sec	---	3.7	---
3	Volumetric Flow Rate	IS 11255 (Part 3)	Nm³/hr	---	3548	---
4	Total Particulate Matter	IS 11255 (Part 1)	mg/Nm³	3	13.9	150
			kg/day	---	0.758	---
1	Ammonia	IS 11255 (Part 6)	mg/Nm³	0.05	7.6	---
			ppm	---	10.93	50
			kg/hr	---	0.039	---
1	Fluoride	IS 11255 (Part 5)	mg/Nm³	0.25	6.8	25
			ppm	---	8.75	---
			kg/day	---	0.579	---

Note :

1. * MDL – Minimum Detectible Limit.
2. ** BDL – Below Detectible Limit
3. This Test Report shall not be reproduced except in full, without written approval of the Laboratory.
4. This Test Report refers only to the sample tested.
5. The Complaint Register is available with the Laboratory as per Environment Protection Act, 1986.

Verified by:

Surekha Jamdar
Dy. Technical Manager

Issued by:

Shraddha Kere
Technical Manager

End of Report

STACK MONITORING REPORT

Name of Organization	: M/s. Deepak Fertilisers And Petrochemicals Corporation Limited.
Customer Address	: Taloja Plant Plot K-1, MIDC Industrial Area, P.O. Taloja Dist. Raigad 410208 Maharashtra
Customer Reference	: Work Order no 4800055893, Dated 24.07.2019

Date of Sampling	Sample Received Date	Analysis Start Date	Analysis Complete Date	Report on Date
24.10.2019	25.10.2019	25.10.2019	28.10.2019	28.10.2019

Sample Type	: Flue Gas (Stack)	Sampling done by	: Netel (India) Limited
Stack Connected to	: ---	Stack Diameter	: 1655 mm
Sampling Location	: ANP Prilling Tower	Sample Code	: NIL/ST/10/19/041

Sr. No.	Parameters	Method	Unit	MDL*	Results	Consent Limits
1	Temperature	IS 11255 (Part 3)	°C	---	**41.0**	---
2	Velocity of Gas	IS 11255 (Part 3)	m/sec	---	**30.8**	---
3	Volumetric Flow Rate	IS 11255 (Part 3)	Nm^3/hr	---	**222538**	---
4	Total Particulate Matter	IS 11255 (Part 1)	mg/Nm^3	3	**19.2**	150
			kg/day	---	**102.546**	---
1	Ammonia	IS 11255 (Part 6)	mg/Nm^3	0.05	**8.2**	---
			ppm	---	**11.79**	50
			kg/hr	---	**2.624**	---
1	Fluoride	IS 11255 (Part 5)	mg/Nm^3	0.25	**BDL**	25
			ppm	---	**BDL**	---
			kg/day	---	**BDL**	---

Note :

1. * MDL – Minimum Detectible Limit.
2. ** BDL – Below Detectible Limit.
3. This Test Report shall not be reproduced except in full, without written approval of the Laboratory.
4. This Test Report refers only to the sample tested.
5. The Complaint Register is available with the Laboratory as per Environment Protection Act,1986.

Verified by:

Surekha Jamdar
Dy. Technical Manager

Issued by:

Shraddha Kere
Technical Manager

End of Report

STACK MONITORING REPORT

Name of Organization	: M/s. Deepak Fertilisers And Petrochemicals Corporation Limited.
Customer Address	: Taloja Plant Plot K-1, MIDC Industrial Area, P.O. Taloja Dist. Raigad 410208 Maharashtra
Customer Reference	: Work Order no. 4800055893, Dated 24.07.2019

Date of Sampling	Sample Received Date	Analysis Start Date	Analysis Complete Date	Report on Date
19.12.2019	20.12.2019	20.12.2019	23.12.2019	23.12.2019

Sample Type	: Flue Gas (Stack)	Sampling done by	: Netel (India) Limited
Stack Connected to	: ---	Stack Diameter	: 953 mm
Sampling Location	: WNA - 1	Sample Code	: NIL/ST/12/19/039

Sr. No.	Parameters	Method	Unit	MDL*	Results	Consent Limits
1	Temperature	IS 11255 (Part 3)	°C	---	**60.0**	---
2	Velocity of Gas	IS 11255 (Part 3)	m/sec	---	**2.06**	---
3	Volumetric Flow Rate	IS 11255 (Part 3)	Nm^3/hr	---	**4721**	---
4	Oxides of Nitrogen	IS 11255 (Part 6)	mg/Nm^3	3	**157.3**	---
			ppm	---	**83.6**	---
			kg/day	---	**17.823**	---
			kg/ton of WNA	---	**0.0710**	3
5	Ammonia	IS 11255 (Part 6)	mg/Nm^3	0.05	**19.30**	---
			ppm	---	**13.42**	---
			kg/hr	---	**0.0634**	3

Note :

1. * MDL – Minimum Detectible Limit.
2. ** BDL – Below Detectible Limit.
3. This Test Report shall not be reproduced except in full, without written approval of the Laboratory.
4. This Test Report refers only to the sample tested.
5. The Complaint Register is available with the Laboratory as per Environment Protection Act,1986.

Verified by:

Surekha Jamdar
Dy. Technical Manager

Issued by:

Shraddha Kere
Technical Manager

End of Report

STACK MONITORING REPORT

Name of Organization	: M/s. Deepak Fertilisers And Petrochemicals Corporation Limited.
Customer Address	: Taloja Plant Plot K-1, MIDC Industrial Area, P.O. Taloja Dist. Raigad 410208 Maharashtra
Customer Reference	: Work Order no. 4800055893, Dated 24.07.2019

Date of Sampling	Sample Received Date	Analysis Start Date	Analysis Complete Date	Report on Date
19.12.2019	20.12.2019	20.12.2019	23.12.2019	23.12.2019

Sample Type	: Flue Gas (Stack)	Sampling done by	: Netel (India) Limited
Stack Connected to	: ---	Stack Diameter	: 953 mm
Sampling Location	: WNA - 2	Sample Code	: NIL/ST/12/19/040

Sr. No.	Parameters	Method	Unit	MDL*	Results	Consent Limits
1	Temperature	IS 11255 (Part 3)	°C	---	**58.0**	---
2	Velocity of Gas	IS 11255 (Part 3)	m/sec	---	**2.25**	---
3	Volumetric Flow Rate	IS 11255 (Part 3)	Nm^3/hr	---	**5188**	---
4	Oxides of Nitrogen	IS 11255 (Part 6)	mg/Nm^3	3	**178.9**	---
			ppm	---	**95.1**	---
			kg/day	---	**22.275**	---
			kg/ton of WNA	---	**0.0779**	3
1	Ammonia	IS 11255 (Part 6)	mg/Nm^3	0.05	**21.10**	---
			ppm	---	**14.67**	---
			kg/hr	---	**0.0761**	3

Note :

1. * MDL – Minimum Detectible Limit.
2. ** BDL – Below Detectible Limit.
3. This Test Report shall not be reproduced except in full, without written approval of the Laboratory.
4. This Test Report refers only to the sample tested.
5. The Complaint Register is available with the Laboratory as per Environment Protection Act,1986.

Verified by:

Surekha Jamdar
Dy. Technical Manager

Issued by:

Shraddha Kere
Technical Manager

End of Report

STACK MONITORING REPORT

Name of Organization	: M/s. Deepak Fertilisers And Petrochemicals Corporation Limited.
Customer Address	: Taloja Plant Plot K-1, MIDC Industrial Area, P.O. Taloja Dist. Raigad 410208 Maharashtra
Customer Reference	: Work Order no. 4800055893, Dated 24.07.2019

Date of Sampling	Sample Received Date	Analysis Start Date	Analysis Complete Date	Report on Date
19.12.2019	20.12.2019	20.12.2019	23.12.2019	23.12.2019

Sample Type	: Flue Gas (Stack)	Sampling done by	: Netel (India) Limited
Stack Connected to	: ---	Stack Diameter	: 953 mm
Sampling Location	: WNA - 3	Sample Code	: NIL/ST/12/19/041

Sr. No.	Parameters	Method	Unit	MDL*	Results	Consent Limits
1	Temperature	IS 11255 (Part 3)	°C	---	**142.0**	---
2	Velocity of Gas	IS 11255 (Part 3)	m/sec	---	**2.30**	---
3	Volumetric Flow Rate	IS 11255 (Part 3)	Nm^3/hr	---	**4229**	---
4	Oxides of Nitrogen	IS 11255 (Part 6)	mg/Nm^3	3	**182.9**	---
			ppm	---	**97.2**	---
			kg/day	---	**18.564**	---
			kg/ton of WNA	---	**0.0670**	3
1	Ammonia	IS 11255 (Part 6)	mg/Nm^3	0.05	**17.60**	---
			ppm	---	**12.24**	---
			kg/hr	---	**0.0518**	3

Note :

1. * MDL – Minimum Detectible Limit.
2. ** BDL – Below Detectible Limit.
3. This Test Report shall not be reproduced except in full, without written approval of the Laboratory.
4. This Test Report refers only to the sample tested.
5. The Complaint Register is available with the Laboratory as per Environment Protection Act,1986.

Verified by:

Surekha Jamdar
Dy. Technical Manager

Issued by:

Shraddha Kere
Technical Manager

End of Report

Netel (India) Limited

STACK MONITORING REPORT

Name of Organization	: M/s. Deepak Fertilisers And Petrochemicals Corporation Limited.
Customer Address	: Taloja Plant Plot K-1, MIDC Industrial Area, P.O. Taloja Dist. Raigad 410208 Maharashtra
Customer Reference	: Work Order no. 4800055893, Dated 24.07.2019

Date of Sampling	Sample Received Date	Analysis Start Date	Analysis Complete Date	Report on Date
19.12.2019	20.12.2019	20.12.2019	23.12.2019	23.12.2019

Sample Type	: Flue Gas (Stack)	Sampling done by	: Netel (India) Limited
Stack Connected to	: ---	Stack Diameter	: 953 mm
Sampling Location	: WNA - 4	Sample Code	: NIL/ST/12/19/042

Sr. No.	Parameters	Method	Unit	MDL*	Results	Consent Limits
1	Temperature	IS 11255 (Part 3)	°C	---	**128.0**	---
2	Velocity of Gas	IS 11255 (Part 3)	m/sec	---	**2.48**	---
3	Volumetric Flow Rate	IS 11255 (Part 3)	Nm^3/hr	---	**4720**	---
4	Oxides of Nitrogen	IS 11255 (Part 6)	mg/Nm^3	3	**226.3**	---
			ppm	---	**120.3**	---
			kg/day	---	**25.635**	---
			kg/ton of WNA	---	**0.0618**	3
1	Ammonia	IS 11255 (Part 6)	mg/Nm^3	0.05	**22.80**	---
			ppm	---	**15.85**	---
			kg/hr	---	**0.0748**	3

Note :

1. * MDL – Minimum Detectible Limit.
2. ** BDL – Below Detectible Limit.
3. This Test Report shall not be reproduced except in full, without written approval of the Laboratory.
4. This Test Report refers only to the sample tested.
5. The Complaint Register is available with the Laboratory as per Environment Protection Act,1986.

Verified by:

Surekha Jamdar
Dy. Technical Manager

Issued by:

Shraddha Kere
Technical Manager

End of Report

STACK MONITORING REPORT

Name of Organization	: M/s. Deepak Fertilisers And Petrochemicals Corporation Limited.
Customer Address	: Taloja Plant Plot K-1, MIDC Industrial Area, P.O. Taloja Dist. Raigad 410208 Maharashtra
Customer Reference	: Work Order no. 4800055893, Dated 24.07.2019

Date of Sampling	Sample Received Date	Analysis Start Date	Analysis Complete Date	Report on Date
31.12.2019	02.01.2020	02.01.2020	04.01.2020	06.01.2020

Sample Type	: Process (Stack)	Sampling done by	: Netel (India) Limited
Stack Connected to	: LDAN Prilling Tower	Stack Diameter	: 1632 mm
Sampling Location	: LDAN Prilling Tower	Sample Code	: NIL/ST/12/19/068

Sr. No.	Parameters	Method	Unit	MDL*	Results	Consent Limits
1	Temperature	IS 11255 (Part 3)	°C	---	**57.0**	---
2	Velocity of Gas	IS 11255 (Part 3)	m/sec	---	**2.12**	---
3	Volumetric Flow Rate	IS 11255 (Part 3)	Nm^3/hr	---	**14340**	---
4	Particulate Matter	IS 11255 (Part 1)	mg/Nm^3	3	**5.9**	100
			kg/day	---	**2.031**	---
5	Ammonia	IS 11255 (Part 6)	mg/Nm^3	0.05	**10.1**	---
			ppm	---	**14.50**	50
			kg/hr	---	**0.1448**	---

Note :

1. * MDL – Minimum Detectible Limit.
2. ** BDL – Below Detectible Limit.
3. This Test Report shall not be reproduced except in full, without written approval of the Laboratory.
4. This Test Report refers only to the sample tested.
5. The Complaint Register is available with the Laboratory as per Environment Protection Act,1986.

Verified by:

Surekha Jamdar
Dy. Technical Manager

Issued by:

Shraddha Kere
Technical Manager

End of Report

STACK MONITORING REPORT

Name of Organization	: M/s. Deepak Fertilisers And Petrochemicals Corporation Limited.
Customer Address	: Taloja Plant Plot K-1, MIDC Industrial Area, P.O. Taloja Dist. Raigad 410208 Maharashtra
Customer Reference	: Work Order no. 4800055893, Dated 24.07.2019

Date of Sampling	Sample Received Date	Analysis Start Date	Analysis Complete Date	Report on Date
31.12.2019	02.01.2020	02.01.2020	04.01.2020	06.01.2020

Sample Type	: Process (Stack)	Sampling done by	: Netel (India) Limited
Stack Connected to	: LDAN Scrubber	Stack Diameter	: 1500 mm
Sampling Location	: LDAN Scrubber	Sample Code	: NIL/ST/12/19/070

Sr. No.	Parameters	Method	Unit	MDL*	Results	Consent Limits
1	Temperature	IS 11255 (Part 3)	°C	---	**56.0**	---
2	Velocity of Gas	IS 11255 (Part 3)	m/sec	---	**1.84**	---
3	Volumetric Flow Rate	IS 11255 (Part 3)	Nm^3/hr	---	**10546**	---
4	Particulate Matter	IS 11255 (Part 1)	mg/Nm^3	3	**7.7**	100
			kg/day	---	**1.949**	---
5	Ammonia	IS 11255 (Part 6)	mg/Nm^3	0.05	**7.5**	---
			ppm	---	**10.77**	50
			kg/hr	---	**0.0791**	---

Note :

1. * MDL – Minimum Detectible Limit.
2. ** BDL – Below Detectible Limit.
3. This Test Report shall not be reproduced except in full, without written approval of the Laboratory.
4. This Test Report refers only to the sample tested.
5. The Complaint Register is available with the Laboratory as per Environment Protection Act,1986.

Verified by:

Surekha Jamdar
Dy. Technical Manager

Issued by:

Shraddha Kere
Technical Manager

End of Report

STACK MONITORING REPORT

Name of Organization	: M/s. Deepak Fertilisers And Petrochemicals Corporation Limited.
Customer Address	: Taloja Plant Plot K-1, MIDC Industrial Area, P.O. Taloja Dist. Raigad 410208 Maharashtra
Customer Reference	: Work Order no. 4800055893, Dated 24.07.2019

Date of Sampling	Sample Received Date	Analysis Start Date	Analysis Complete Date	Report on Date
31.12.2019	02.01.2020	02.01.2020	04.01.2020	06.01.2020

Sample Type	: Process (Stack)	Sampling done by	: Netel (India) Limited
Stack Connected to	: GP Vent	Stack Diameter	: 640 mm
Sampling Location	: GP Vent	Sample Code	: NIL/ST/12/19/069

Sr. No.	Parameters	Method	Unit	MDL*	Results	Consent Limits
1	Temperature	IS 11255 (Part 3)	°C	---	**41.0**	---
2	Velocity of Gas	IS 11255 (Part 3)	m/sec	---	**1.88**	---
3	Volumetric Flow Rate	IS 11255 (Part 3)	Nm^3/hr	---	**2058**	---
4	Particulate Matter	IS 11255 (Part 1)	mg/Nm^3	3	**9.3**	100
			kg/day	---	**0.459**	---
5	Ammonia	IS 11255 (Part 6)	mg/Nm^3	0.05	**8.8**	---
			ppm	---	**12.63**	50
			kg/hr	---	**0.0181**	---

Note :

1. * MDL – Minimum Detectible Limit.
2. ** BDL – Below Detectible Limit.
3. This Test Report shall not be reproduced except in full, without written approval of the Laboratory.
4. This Test Report refers only to the sample tested.
5. The Complaint Register is available with the Laboratory as per Environment Protection Act,1986.

Verified by:

Surekha Jamdar
Dy. Technical Manager

Issued by:

Shraddha Kere
Technical Manager

End of Report

STACK MONITORING REPORT

Name of Organization	: M/s. Deepak Fertilisers And Petrochemicals Corporation Limited.
Customer Address	: Taloja Plant Plot K-1, MIDC Industrial Area, P.O. Taloja Dist. Raigad 410208 Maharashtra
Customer Reference	: Work Order no. 4800055893, Dated 24.07.2019

Date of Sampling	Sample Received Date	Analysis Start Date	Analysis Complete Date	Report on Date
24.12.2019	25.12.2019	25.12.2019	28.12.2019	28.12.2019

Sample Type	: Process Gas (Stack)	Sampling done by	: Netel (India) Limited
Stack Connected to	: CNA-3	Stack Diameter	: 75 mm
Sampling Location	: CNA-3	Sample Code	: NIL/ST/12/19/060

Sr. No.	Parameters	Method	Unit	MDL*	Results	Consent Limits
1	Temperature	IS 11255 (Part 3)	°C	---	**46.0**	---
2	Velocity of Gas	IS 11255 (Part 3)	m/sec	---	**2.21**	---
3	Volumetric Flow Rate	IS 11255 (Part 3)	Nm^3/hr	---	**32.71**	---
4	Oxides of Nitrogen	IS 11255 (Part 6)	mg/Nm^3	3	**53.7**	---
			ppm	---	**28.3**	50
			kg/day	---	**0.012**	---
5	Ammonia	IS 11255 (Part 6)	mg/Nm^3	0.05	**26.40**	---
			ppm	---	**18.36**	---
			kg/hr	---	**0.0006**	---

Note :

1. * MDL – Minimum Detectible Limit.
2. ** BDL – Below Detectible Limit.
3. This Test Report shall not be reproduced except in full, without written approval of the Laboratory.
4. This Test Report refers only to the sample tested.
5. The Complaint Register is available with the Laboratory as per Environment Protection Act,1986.

Verified by:

Surekha Jamdar
Dy. Technical Manager

Issued by:

Shraddha Kere
Technical Manager

End of Report

STACK MONITORING REPORT

Name of Organization	: M/s. Deepak Fertilisers And Petrochemicals Corporation Limited.
Customer Address	: Taloja Plant Plot K-1, MIDC Industrial Area, P.O. Taloja Dist. Raigad 410208 Maharashtra
Customer Reference	: Work Order no. 4800055893, Dated 24.07.2019

Date of Sampling	Sample Received Date	Analysis Start Date	Analysis Complete Date	Report on Date
20.12.2019	21.12.2019	21.12.2019	24.12.2019	24.12.2019

Sample Type	: Flue Gas (Stack)	Sampling done by	: Netel (India) Limited
Stack Connected to	: Boiler	Stack Diameter	: 1500
Sampling Location	: CES-A Engine Exhaust Boiler	Sample Code	: NIL/ST/12/19/043

Sr. No.	Parameters	Method	Unit	MDL*	Results	Consent Limits
1	Stack Temperature	IS 11255 (Part 3)	°C	---	**180**	---
2	Stack Gas Velocity	IS 11255 (Part 3)	m/sec	---	**8.63**	---
3	Volumetric Flow Rate	IS 11255 (Part 3)	Nm^3/hr	---	**35859**	---
4	Sulphur Dioxide	IS 11255 (Part 2)	mg/Nm^3	3	**3.9**	---
			ppm	---	**1.5**	---
			kg/day	---	**3.36**	---
5	Oxides of Nitrogen	IS 11255 (Part 7)	mg/Nm^3	3	**10.2**	---
			ppm	---	**5.4**	50
			kg/day	---	**8.78**	---
6	Carbon Monoxide	USEPA – 10A	mg/Nm^3	4	**16.7**	---
			ppm	---	**14.6**	---
			kg/day	---	**14.37**	---

Note :

1. * MDL – Minimum Detectible Limit.
2. ** BDL – Below Detectible Limit.
3. This Test Report shall not be reproduced except in full, without written approval of the Laboratory.
4. This Test Report refers only to the sample tested.
5. The Complaint Register is available with the Laboratory as per Environment Protection Act,1986.

Verified by:

Surekha Jamdar
Dy. Technical Manager

Issued by:

Shraddha Kere
Technical Manager

End of Report

Netel (India) Limited

STACK MONITORING REPORT

Name of Organization	: M/s. Deepak Fertilisers And Petrochemicals Corporation Limited.
Customer Address	: Taloja Plant Plot K-1, MIDC Industrial Area, P.O. Taloja Dist. Raigad 410208 Maharashtra
Customer Reference	: Work Order no. 4800055893, Dated 24.07.2019

Date of Sampling	Sample Received Date	Analysis Start Date	Analysis Complete Date	Report on Date
20.12.2019	21.12.2019	21.12.2019	24.12.2019	24.12.2019

Sample Type	: Flue Gas (Stack)	Sampling done by	: Netel (India) Limited
Stack Connected to	: Boiler	Stack Diameter	: 1500
Sampling Location	: CES-B Engine Exhaust Boiler	Sample Code	: NIL/ST/12/19/044

Sr. No.	Parameters	Method	Unit	MDL*	Results	Consent Limits
1	Stack Temperature	IS 11255 (Part 3)	°C	---	176	---
2	Stack Gas Velocity	IS 11255 (Part 3)	m/sec	---	9.18	---
3	Volumetric Flow Rate	IS 11255 (Part 3)	Nm^3/hr	---	38484	---
4	Sulphur Dioxide	IS 11255 (Part 2)	mg/Nm^3	3	4.1	---
			ppm	---	1.6	---
			kg/day	---	3.79	---
5	Oxides of Nitrogen	IS 11255 (Part 7)	mg/Nm^3	3	11.5	---
			ppm	---	6.1	50
			kg/day	---	10.62	---
6	Carbon Monoxide	USEPA – 10A	mg/Nm^3	4	17.3	---
			ppm	---	15.1	---
			kg/day	---	15.98	---

Note :

1. * MDL – Minimum Detectible Limit.
2. ** BDL – Below Detectible Limit.
3. This Test Report shall not be reproduced except in full, without written approval of the Laboratory.
4. This Test Report refers only to the sample tested.
5. The Complaint Register is available with the Laboratory as per Environment Protection Act,1986.

Verified by:

Surekha Jamdar
Dy. Technical Manager

Issued by:

Shraddha Kere
Technical Manager

End of Report

STACK MONITORING REPORT

Name of Organization	: M/s. Deepak Fertilisers And Petrochemicals Corporation Limited.
Customer Address	: Taloja Plant Plot K-1, MIDC Industrial Area, P.O. Taloja Dist. Raigad 410208 Maharashtra
Customer Reference	: Work Order no. 4800055893, Dated 24.07.2019

Date of Sampling	Sample Received Date	Analysis Start Date	Analysis Complete Date	Report on Date
20.12.2019	21.12.2019	21.12.2019	24.12.2019	24.12.2019

Sample Type	: Flue Gas (Stack)	Sampling done by	: Netel (India) Limited
Stack Connected to	: Reformer	Stack Diameter	: 1373
Sampling Location	: Ammonia Primary Reformer	Sample Code	: NIL/ST/12/19/045

Sr. No.	Parameters	Method	Unit	MDL*	Results	Consent Limits
1	Stack Temperature	IS 11255 (Part 3)	°C	---	**166**	---
2	Stack Gas Velocity	IS 11255 (Part 3)	m/sec	---	**9.56**	---
3	Volumetric Flow Rate	IS 11255 (Part 3)	Nm^3/hr	---	**34339**	---
4	Sulphur Dioxide	IS 11255 (Part 2)	mg/Nm^3	3	**6.4**	---
			ppm	---	**2.4**	---
			kg/day	---	**5.27**	---
5	Oxides of Nitrogen	IS 11255 (Part 7)	mg/Nm^3	3	**8.7**	---
			ppm	---	**4.6**	50
			kg/day	---	**7.17**	---
6	Carbon Monoxide	USEPA – 10A	mg/Nm^3	4	**11.9**	---
			ppm	---	**10.4**	---
			kg/day	---	**9.81**	---

Note :

1. * MDL – Minimum Detectible Limit.
2. ** BDL – Below Detectible Limit.
3. This Test Report shall not be reproduced except in full, without written approval of the Laboratory.
4. This Test Report refers only to the sample tested.
5. The Complaint Register is available with the Laboratory as per Environment Protection Act,1986.

Verified by:

Surekha Jamdar
Dy. Technical Manager

Issued by:

Shraddha Kere
Technical Manager

End of Report

STACK MONITORING REPORT

Name of Organization	: M/s. Deepak Fertilisers And Petrochemicals Corporation Limited.
Customer Address	: Taloja Plant Plot K-1, MIDC Industrial Area, P.O. Taloja Dist. Raigad 410208 Maharashtra
Customer Reference	: Work Order no. 4800055893, Dated 24.07.2019

Date of Sampling	Sample Received Date	Analysis Start Date	Analysis Complete Date	Report on Date
20.12.2019	21.12.2019	21.12.2019	24.12.2019	24.12.2019

Sample Type	: Flue Gas (Stack)	Sampling done by	: Netel (India) Limited
Stack Connected to	: Boiler	Stack Diameter	: 1500
Sampling Location	: HRSG 5	Sample Code	: NIL/ST/12/19/046

Sr. No.	Parameters	Method	Unit	MDL*	Results	Consent Limits
1	Stack Temperature	IS 11255 (Part 3)	°C	---	**108**	---
2	Stack Gas Velocity	IS 11255 (Part 3)	m/sec	---	**10.84**	---
3	Volumetric Flow Rate	IS 11255 (Part 3)	Nm^3/hr	---	**53533**	---
4	Sulphur Dioxide	IS 11255 (Part 2)	mg/Nm^3	3	**5.5**	---
			ppm	---	**2.1**	---
			kg/day	---	**7.07**	---
5	Oxides of Nitrogen	IS 11255 (Part 7)	mg/Nm^3	3	**9.4**	---
			ppm	---	**5.0**	50
			kg/day	---	**12.08**	---
6	Carbon Monoxide	USEPA – 10A	mg/Nm^3	4	**12.2**	---
			ppm	---	**10.7**	---
			kg/day	---	**15.67**	---

Note :

1. * MDL – Minimum Detectible Limit.
2. ** BDL – Below Detectible Limit.
3. This Test Report shall not be reproduced except in full, without written approval of the Laboratory.
4. This Test Report refers only to the sample tested.
5. The Complaint Register is available with the Laboratory as per Environment Protection Act,1986.

Verified by:

Surekha Jamdar
Dy. Technical Manager

Issued by:

Shraddha Kere
Technical Manager

End of Report

STACK MONITORING REPORT

Name of Organization	: M/s. Deepak Fertilisers And Petrochemicals Corporation Limited.
Customer Address	: Taloja Plant Plot K-1, MIDC Industrial Area, P.O. Taloja Dist. Raigad 410208 Maharashtra
Customer Reference	: Work Order no. 4800055893, Dated 24.07.2019

Date of Sampling	Sample Received Date	Analysis Start Date	Analysis Complete Date	Report on Date
20.12.2019	21.12.2019	21.12.2019	24.12.2019	24.12.2019

Sample Type	: Flue Gas (Stack)	Sampling done by	: Netel (India) Limited
Stack Connected to	: Boiler	Stack Diameter	: 1500
Sampling Location	: HRSG 1	Sample Code	: NIL/ST/12/19/047

Sr. No.	Parameters	Method	Unit	MDL*	Results	Consent Limits
1	Stack Temperature	IS 11255 (Part 3)	°C	---	**102**	---
2	Stack Gas Velocity	IS 11255 (Part 3)	m/sec	---	**10.01**	---
3	Volumetric Flow Rate	IS 11255 (Part 3)	Nm^3/hr	---	**50298**	---
4	Sulphur Dioxide	IS 11255 (Part 2)	mg/Nm^3	3	**4.6**	---
			ppm	---	**1.8**	---
			kg/day	---	**5.55**	---
5	Oxides of Nitrogen	IS 11255 (Part 7)	mg/Nm^3	3	**13.1**	---
			ppm	---	**7.0**	50
			kg/day	---	**15.81**	---
6	Carbon Monoxide	USEPA – 10A	mg/Nm^3	4	**15.9**	---
			ppm	---	**13.9**	---
			kg/day	---	**19.19**	---

Note :

1. * MDL – Minimum Detectible Limit.
2. ** BDL – Below Detectible Limit.
3. This Test Report shall not be reproduced except in full, without written approval of the Laboratory.
4. This Test Report refers only to the sample tested.
5. The Complaint Register is available with the Laboratory as per Environment Protection Act,1986.

Verified by:

Surekha Jamdar
Dy. Technical Manager

Issued by:

Shraddha Kere
Technical Manager

End of Report

STACK MONITORING REPORT

Name of Organization	: M/s. Deepak Fertilisers And Petrochemicals Corporation Limited.
Customer Address	: Taloja Plant Plot K-1, MIDC Industrial Area, P.O. Taloja Dist. Raigad 410208 Maharashtra
Customer Reference	: Work Order no. 4800055893, Dated 24.07.2019

Date of Sampling	Sample Received Date	Analysis Start Date	Analysis Complete Date	Report on Date
20.12.2019	21.12.2019	21.12.2019	24.12.2019	24.12.2019

Sample Type	: Flue Gas (Stack)	Sampling done by	: Netel (India) Limited
Stack Connected to	: Boiler	Stack Diameter	: 1830
Sampling Location	: Boiler D	Sample Code	: NIL/ST/12/19/048

Sr. No.	Parameters	Method	Unit	MDL*	Results	Consent Limits
1	Stack Temperature	IS 11255 (Part 3)	°C	---	112	---
2	Stack Gas Velocity	IS 11255 (Part 3)	m/sec	---	5.07	---
3	Volumetric Flow Rate	IS 11255 (Part 3)	Nm^3/hr	---	36953	---
4	Sulphur Dioxide	IS 11255 (Part 2)	mg/Nm^3	3	BDL	---
			ppm	---	BDL	---
			kg/day	---	BDL	---
5	Oxides of Nitrogen	IS 11255 (Part 7)	mg/Nm^3	3	7.3	---
			ppm	---	3.9	50
			kg/day	---	6.47	---
6	Carbon Monoxide	USEPA – 10A	mg/Nm^3	4	8.6	---
			ppm	---	7.5	---
			kg/day	---	7.63	---

Note :

1. * MDL – Minimum Detectible Limit.
2. ** BDL – Below Detectible Limit.
3. This Test Report shall not be reproduced except in full, without written approval of the Laboratory.
4. This Test Report refers only to the sample tested.
5. The Complaint Register is available with the Laboratory as per Environment Protection Act,1986.

Verified by:

Surekha Jamdar
Dy. Technical Manager

Issued by:

Shraddha Kere
Technical Manager

End of Report

NOISE LEVEL MONITORING REPORT

Name of Organization	: M/s. Deepak Fertilisers And Petrochemicals Corporation Limited.
Address	: Taloja Plant Plot K-1, MIDC Industrial Area, P.O. Taloja Dist. Raigad 410208 Maharashtra
Customers Reference	: Work Order no. 4800055893, Dated 24.07.2019

Instrument Model	: Lutron SL-4033-SD (Class 1)	Instrument Serial No.	: Q640792
Date of Sampling	: 03.10.2019	Date of Calibration	: 17.09.2019
Date of Reporting	: 06.10.2019	Next Calibration Due	: 16.09.2020

Sr. No.	Location	Leq (dBA)			
		Day	MPCB Limit	Night	MPCB Limit
1	Main Gate	73.4	75	69.4	70
2	NPK Gate No. 4	61.9	75	55.4	70
3	NPK Raw Material Storage Area	65.2	75	68.7	70
4	NPK Production Unit	62.2	75	63.6	70
5	Near IPA Gate	69.9	75	69.4	70
6	Near CFB Cooling Tower	72.1	75	67.8	70
7	Ammonia Unloading	73.3	75	69.5	70
8	K-6 Plot (Near Main Gate)	69.9	75	68.6	70

Note :

1. This Test Report shall not be reproduced except in full, without written approval of the Laboratory.
2. This Test Report refers only to the sample tested.
3. The Complaint Register is available with the Laboratory as per Environment Protection Act,1986

Verified by:

Surekha Jamdar
Dy. Technical Manager

Issued by:

Shraddha Kere
Technical Manager

End of Report

NOISE LEVEL MONITORING REPORT

Name of Organization	: M/s. Deepak Fertilisers And Petrochemicals Corporation Limited.
Address	: Taloja Plant Plot K-1, MIDC Industrial Area, P.O. Taloja Dist. Raigad 410208 Maharashtra
Customers Reference	: Work Order no. 4800055893, Dated 24.07.2019

Instrument Model	: Lutron SL-4033-SD (Class 1)	Instrument Serial No.	: Q640792
Date of Sampling	: 22.11.2019	Date of Calibration	: 17.09.2019
Date of Reporting	: 26.11.2019	Next Calibration Due	: 16.09.2020

Sr. No.	Location	Leq (dBA)			
		Day	MPCB Limit	Night	MPCB Limit
1	Main Gate	**72.9**	75	**69.0**	70
2	NPK Gate No. 4	**60.0**	75	**54.8**	70
3	NPK Raw Material Storage Area	**66.5**	75	**68.7**	70
4	NPK Production Unit	**64.1**	75	**61.7**	70
5	Near IPA Gate	**71.8**	75	**69.8**	70
6	Near CFB Cooling Tower	**69.9**	75	**69.4**	70
7	Ammonia Unloading	**72.1**	75	**68.6**	70
8	K-6 Plot (Near Main Gate)	**71.3**	75	**69.7**	70

Note :

1. This Test Report shall not be reproduced except in full, without written approval of the Laboratory.
2. This Test Report refers only to the sample tested.
3. The Complaint Register is available with the Laboratory as per Environment Protection Act,1986.

Verified by:

Surekha Jamdar
Dy. Technical Manager

Issued by:

Shraddha Kere
Technical Manager

End of Report

Netel (India) Limited

NOISE LEVEL MONITORING REPORT

Name of Organization	: M/s. Deepak Fertilisers And Petrochemicals Corporation Limited.
Address	: Taloja Plant Plot K-1, MIDC Industrial Area, P.O. Taloja Dist. Raigad 410208 Maharashtra
Customers Reference	: Work Order no. 4800055893, Dated 24.07.2019

Instrument Model	: Lutron SL-4033-SD (Class II)	Instrument Serial No.	: Q640792
Date of Sampling	: 20.12.2019	Date of Calibration	: 17.09.2019
Date of Reporting	: 24.12.2019	Next Calibration Due	: 16.09.2020

Sr. No.	Location	Leq (dBA)			
		Day	MPCB Limit	Night	MPCB Limit
1	Main Gate	**74.4**	75	**63.7**	70
2	NPK Gate No. 4	**59.4**	75	**58.0**	70
3	NPK Raw Material Storage Area	**67.8**	75	**65.3**	70
4	NPK Production Unit	**64.1**	75	**62.8**	70
5	Near IPA Gate	**73.2**	75	**69.6**	70
6	Near CFB Cooling Tower	**69.2**	75	**66.7**	70
7	Ammonia Unloading	**72.8**	75	**62.3**	70
8	K-6 Plot (Near Main Gate)	**72.0**	75	**69.8**	70

Note :

1. This Test Report shall not be reproduced except in full, without written approval of the Laboratory.
2. This Test Report refers only to the sample tested.
3. The Complaint Register is available with the Laboratory as per Environment Protection Act,1986.

Verified by:

Surekha Jamdar
Dy. Technical Manager

Issued by:

Shraddha Kere
Technical Manager

End of Report

A Neterwala Group Company

W-408, Rabale MIDC,
TTC Industrial Area,
NAVI MUMBAI - 400 701.
INDIA.

Tel. : + 91 022 2760 7102 / 2760 7103
Fax : + 91 022 2760 7100

E-mail : sales@netel-india.com
Website : www.netel-india.com
CIN : U74999MH2003PLC142228

ISO 9001:2015
TÜVRheinland CERTIFIED
www.tuv.com ID 9105082996

Regd. office : Liberty Building, 3rd Floor, Sir Vithaldas Thackersey Marg, (New Marine Lines), Mumbai - 400 020. Tel. : 22066231 / 61

स्वच्छ भारत
एक कदम स्वच्छता की ओर

NOISE LEVEL MONITORING REPORT

Name of Organization	: M/s Reliance Industries Limited
Address	: Nagothane, Taluka Roha, District Raigad - 402 125
Customers Reference	: Work Order No. NN0/230030690, Dated 25.05.2017

Instrument Model	: Lutron SL-4033-SD (Class 1)	Instrument Serial No. :	Q640792
Date of Sampling	: 21.01.2020	Date of Calibration	: 27.09.2019
Date of Reporting	: 24.01.2020	Next Calibration Due :	28.09.2020

Sr. No.	Location	Leq (dBA)			
		Day	MPCB Limit	Night	MPCB Limit
1	Main Gate	**69.1**	75	**65.0**	70
2	NPK Gate No. 4	**56.7**	75	**56.8**	70
3	NPK Raw Material Storage Area	**71.3**	75	**68.4**	70
4	NPK Production Unit	**58.6**	75	**56.3**	70
5	Near IPA Gate	**64.2**	75	**64.4**	70
6	Near CFB Cooling Tower	**71.8**	75	**69.4**	70
7	Ammonia Unloading	**61.9**	75	**60.2**	70
8	K-6 Plot (Near Main Gate)	**72.5**	75	**67.8**	70

Note :

1. This Test Report shall not be reproduced except in full, without written approval of the Laboratory.
2. This Test Report refers only to the sample tested.
3. The Complaint Register is available with the Laboratory as per Environment Protection Act,1986.

Verified by:

Surekha Jamdar
Dy. Technical Manager

Issued by:

Shraddha Kere
Technical Manager

End of Report

DEEPAK FERTILISERS AND PETROCHEMICALS CORPORATION LIMITED

Deepak Fertilizers and Petrochemicals Corporation Ltd, Taloja
CSR Report 2019-20 Yearly (Up to March 2020)

VISION

To act as an effective catalyst in Deepak Fertilisers And Petrochemicals Corporation Limited (DFPCL) geographies of operations in creating a self-reliant and respectable society with secure and sustained means to livelihood, through employable skills and resource support and additionally to promote and support the rich cultural heritage of India.

MISSION

The mission for the identified society at large, in geographies of DFPCL's operations and influence, shall be:

- To identify the potential of and gaps in the economic and social support systems, so as to help develop a sustained, self-reliant society with special emphasis on the youth, women & marginal farmers
- To undertake vocational skill and soft skill development initiatives enabling sustained and respectable employment opportunities for leading a self-reliant life
- To facilitate income generation programs of individuals / groups through alignment of skill development with self-employment opportunities
- To provide marketing and financial support to help enhance sustained income generation initiatives
- To generate community development activities and promote self-help groups so as to improve the living conditions of people through peoples' initiatives
- To initiate activities and develop government / institutional linkages in community preventive / corrective health facilities where needed
- To undertake farmer skill building, soil / nutrient / agri-inputs / produce enhancement initiatives
- To support performing arts among local communities for promotion of talent & cultural richness of the society
- To provide a much-needed crisis support for unexpected calamities and disasters
- To co-ordinate / conduct any other CSR initiatives which are consistent with the provisions of Section 135 of the Companies Act, 2013 or other provisions as may be prescribed by the government from time to time.

Introduction:

As a true corporate citizen, DFPCL is committed to social thought and action and is resolute in its dedication to serve the society they live in. The Company has been engaged in community work through **Ishanya Foundation** at Taloja and Pune in Maharashtra.

The CSR Arm of Deepak Fertilisers and Petrochemicals Corporation Limited, Pune (DFPCL), Ishanya Foundation (ISFON) is a registered NGO under the provision of the Bombay Public Trust Act 1950.

DFPCL has always considered its surrounding communities as an important group of stakeholders in its business and is committed to contribute towards improving their quality of life through various measures. Projects being implemented in **47 villages and 19 hamlets and urban area of Pune**:

Sr.No.	Block	Revenue Village	Hamlet
1	Panvel	Ambe	
2	Panvel	Ambivali	
3	Panvel	Shirwali	
4	Panvel	Chinchvali -T	
5	Panvel	Wavanja	

6	Panvel	Nitlas	
7	Panvel	Devichapada	
8	Panvel	Pale Kh	
	Panvel		Dongryachapada
9	Panvel	Chindran	
10	Panvel	Tondre	
11	Panvel	Khairne	
12	Panvel	Mahalungi	
13	Panvel	Kanpoli	
14	Panvel	Nere	
	Panvel		Nerepada
	Panvel		Bhokarpada
	Panvel		Sangtoli
15	Panvel	Owe	
	Panvel		Owe Camp
	Panvel		Peth
16	Panvel	Shivkar	
	Panvel		Mohopada
17	Ambarnath	Brudul	
18	Panvel	Cherwali	
19	Panvel	Waje	
20	Ambarnath	Shelarpada (Ambrnath)	
	Ambarnath		Mhatrepada
21	Ambarnath	Chirad	
22	Ambarnath	Chinchvali (Ambrnath)	
23	Panvel	Pale BK	
	Panvel		Walvali
	Panvel		Kolwadi
24	Panvel	Khanav	
25	Ambarnath	Kumbarli	
26	Panvel	Talojamajkur	
	Panvel		Dharna
	Panvel		Pethali
27	Panvel	Turbhe	
28	Panvel	Siddhikarvale	
29	Panvel	Morbe	
30	Ambarnath	Karvale KH	
31	Panvel	Wagani (TT)	
32	Panvel	Karmbeli	
	Panvel		Bhalyachiwadi
	Panvel		Yelmar
33	Panvel	Khairwadi	
	Panvel		Fanswadi
	Panvel		Garmal

34	Panvel	Modhar	
	Panvel		Kuttarpada
35	Panvel	Hedutne	
36	Panvel	Gadeswar	
	Panvel		Rithghar
37	Panvel	Dhundre	
38	Panvel	Dhamni	
	Panvel		Housechiwadi
39	Panvel	Deharang	
40	Panvel	Kondap	
41	Panvel	Poyanje	
42	Panvel	Wardoli	
43	Ambarnath	Nariwali	
44	Ambarnath	Narhhean	
45	Ambarnath	Usatne	
46	Ambarnath	Dombiwali	
47	Panvel	Vihighar	

Nearly 17081 families served in urban, rural and tribal areas through various initiatives by the end of financial year 2019-20.

Sr. No	Name of Project	Major Activity	No. of Families Benefited
1	Wadi & Health	Wadi, Veg., WRD	0558
3	Dairy Development	Livestock & Artificial Insemination	0481
4	Arogyam	Health Camps, Eye Camp, Cataract Operation, Mobile Clinic	09398
	Community Development and Social Welfare	Watershed, Development, Disaster Relief, Drinking Water, Scheme	2394
5	Vocational Skill Development	Vocational Courses and Placement	298
6	LEED	Entrepreneurship Development, Yellow Ribbon NGO Fair, Muskaan, Income Generation Program	3100
7	Gyanam	Scholl Infrastructure and human Resource	464
	I-REACH	Art & Culture	388
	Total		**17081**

DFPCL is implementing need-based activities in more than 50 hamlets and villages of New Panvel and urban area of Pune. **Under CSR initiatives projects and activities are being implemented**:

Wadi Development

- Horticulture Plantation (Mango)
- Promotion of Vegetables crops
- Promotion of Floriculture
- Health
- Farmers Capacity Building

Dairy Development

- Cattle Induction
- Door-step health services for cattle
- Artificial Insemination
- Fodder Development
- Vaccination
- Farmers Capacity Building

Vocational Training

- Diploma in opthomatry
- Tailoring

Health and Education

- Mobile Clinic
- Health check-up camp
- Eye camp
- Kitchen Garden

Wadi Project

The overall objective of the project is to improve the standard and quality of living of the poor rural families through a holistic and enabling project approach. This can be achieved by helping the tribal and other families to develop productive assets such as a 'Wadi' (integrated farming system comprising of horticulture, agriculture) to enable them to earn substantial and sustainable livelihood over a long-term period. Simultaneously, there is need for a thrust to tackle the root causes of poor health and improve the quality of living, particularly of women.

Mango Fruiting

The proposed project thus primarily aims at the following:

- To provide secondary sustainable source of income
- To increase the asset base of the tribals & other

• To empower of women through economic and social development
• To improve the health status of the community
• To improve environment through carbon fixation

Project Activities:

Under wadi livelihood project each participant family takes up intensive land development and plantation work on half acre (0.2 ha) of wasteland or marginal land, to convert this into a productive forestry plantation and orchard (WADI).

Objectives are highlighted below:

- Mobilisation of community through project promotional meetings and exposure.
- Selection of beneficiaries and land
- Plantation of fruit and forestry trees.
- Development of eroded wasteland through soil and water conservation.
- Water resource development and water conveyance
- Cultivation of suitable improved intercrops both for food and for cash incomes wherever possible during the initial stage
- Capacity building of staff and beneficiaries
- Development of Model Plots: The objective of these demonstration / model plots will be to create awareness in farmers about cost effective farming techniques, new introduction of crops, diversified farming techniques etc.
- Community Health Activities:
  - Eye Check-up Camps and Cataract Operation
  - Seasonal and perennial Kitchen Garden
  - General Health Check-up camps for Women and children
- Women Empowerment:
  - Training to existing women's groups
  - Wadi on women's name
  - Exposure

Major Achievements:

Sr.No.	Major Activity	Target	Achievement	Remarks
1	Wadi Plantation Batch-VII: Selection, Layout, Pit digging, Pit Filling with Basal Dose and Plantation of Wadi and Documentation	80	80	Plantation of 2480 Mango Grafts-(Variety-Keshar) Survival 93.25 % as on March 20
2	Support for Farm Implements Batch-VII	80	80	Set of one Spade, Pickaxe and Secateurs per farmer
3	Live Fencing to Wadi (Bamboo)	80	80	Plantation of Forestry Plants done (Bamboo) -4000 nos.
4	Plant Protection (B-I to B-VII)	556	556	Done support for pesticide (Bordopest, Carbendazim and Insecticide)
5	Support for Nutrient management (B-I to B-VII)	556	556	Provided NPK and Micronutrient
6	Support for WRD and Conveyance	80	80	Support for tank, pipe, Motor and engine to ensure protective irrigation to Wadi
7	Soil and Water Conservation-B-VII	80	72	SWC work is not required to 8 wadi

8	Support of Vegetable Seed (Nos. of Farmers)	240	240	vegetable cultivation done on ~80-acre area. Farmer getting additional income of Rs.15000-25000 per farmer.
13	Trial Plot (Exotic/ new vegetables)	6	6	Zukeni, Paddy, Okera, Sweet Corn, Marigold, Sweet Corn.
14	Vegetable Nursery in tray	03	04	7100 no's of seedling are prepared, Sell out 3900 no's seedling and getting additional income of Rs.9300.00.
15	Mango Graft Nursery	5	02	Intended mango graft make available at local level.
16	Jasmin Nursery	01	01	2700 plants are ready
Capacity Building				
1	Farmers internal exposure	4	4	
2	Exposure of staff and Volunteers	2	2	Conducted exposure visit for staff at Nasik exhibition and Sinner taluka to update the knowledge.
4	Kishan Melava	2	2	162 Participants
5	Village Meeting	150	150	

Case Study

Project: Wadi Project | **Year of Participation: 2014**

Name of Aspirant: Ms. Budhi Ambho, Mr. Ambho Kamlya Bhagat

Village: Shirvali Taluka Panvel District Raigad

Family Profile: Ambho and Bhudi have two sons and a daughter. The elder son is working on a temporary basis and their 17 years old daughter is helping her parents in their farm work. The third child is physically challenged.

Land: 1 Acre

Wadi Yield Year	No. of fruit tree	Home consumption quantity in kg.	Sold quantity in kg.	Total harvested quantity in kg.	Total Income
2018-19	22	33	214	247	Rs. 27,325

Dairy Development Project

Dairy is an important subsidiary source of income for small/marginal and agricultural labourers in rural area. The manure from animals provides good source of organic matter to improve soil fertility and crop yield. The surplus fodder and agricultural by products are gainfully utilized for feeding the animals. Since agriculture is mostly seasonal, there is possibility of finding employment throughout year for many women through dairy farming. Thus, dairy also provides employment throughout the year. The main beneficiaries of project are small/marginal farmers and landless labours. The aspirant can earn a gross surplus of about 35000 per year from a unit

Major Achievements:

Sr. No.	Major Activity	Target	Achievement	Remarks
1	Training of aspirant's new batches	03	03	Total 13 aspirants attended Training with exposure
2	Livestock Training (CLDP)	02	02	Two training were conducted at Khanav and Kumbharli village. 21 women and 70 men dairy entrepreneur participated in this training.
3	Doorstep Visit of expert for Monitoring & treatment of critical cows/Calves	04	03	Visit of Dr. D. S. Chature No. of cows & Calves Treated: 146 (Empty Cow-106, Treatment of Cow & Calves-26, Empty Calves-14 Total: 146)
4	External Exposure Visit	01	01	The intention was learning by seeing we have conducted 01 exposure at Dairy Exhibition on 16 Dec 2019 at Katraj, Pune. In which 26 aspirants were participated. (M- 24& F-2)
5	Internal Exposure Visit	02	02	27 dairy aspirants were participated in the exposure. It was intended to create awareness about adoption of best dairy management practices. (M- 21+ F-6= 27)
6	Purchase of Cows	15	15	Support given to 15 aspirants for livelihood development thorough cow induction activity under dairy development project. Apart from this we have provided health services, Insurance and required medicines at initial period.
7	Vaccination FMD	600	600	Prevention is better than cure, so we have done vaccination for FMD to 600 milking animals as a preventive measure. (Cows-88+Calves-124+Other-388,Total=600)
8	Vaccination Theileriosis	200	110	Done vaccination to 110 cattle's as a preventive measure (Cows-45 + Calves-65); Balance are in progress.
9	Female Calves Growth Monitoring	04	04	We are closely monitoring growth of female calves and as per observation, continuous efforts are being made for better growth of calves. (Excellent-46, Good-34, AV-55, Poor-61, Total=196) Created Asset of Rs.23.03 lakh.
10	Artificial Insemination	750	758	Provided doorstep artificial insemination service in 54 villages of Panvel, Amarnath & kalyan taluka.

11	Pregnancy Diagnosis (up to Dec End)	763	763	We are doing regular and timely pregnancy diagnosis. (CPD-309; Empty-75; Repeat-291 & Pending-88=763) Conception Rate-45.77%
12	Calving		310	New 310 cow were born during this year. Which will lead to increase in asset base of livestock (Male-136, Female-174)
13	Perennial Fodder Plot	10	06	Due to water scarcity in summer season in the area unable to achieve target. Apart from this less acceptance for Azzola.
14	Calf rally	1	1	To increase Healthy competition between aspirants we have organized calf rally on 23.1.20 at Pale village. In which 34 aspirants participated with their 53 female calves. We have provided prizes for 03 best calves in each age group.
15	Calf Grower Feed	75	40	Balance distribution is under progress, acceptance level for the same is low.
16	Vermicompost Bed	10	10	
17	Silage Bag	10	10	
18	Maize seed Distribution	20	20	Convergence from Govt. Scheme total 320 Kg seed distributed to 20 dairy aspirants.

Total Artificial Insemination Report Since Inception:

	2014-15	2015-16	2016-17	2017-18	2018-19	2019-20
Artificial Insemination	307	602	549	602	735	762
Pregnancy Diagnosis	178	367	294	367	431	532
Calving						
Male	49	57	91	135	142	
Female	56	64	141	109	137	

Output of the Dairy Project

Details	Cow Milk Summery	Calf Milk Summery	Total
Total Milk Produced	72920 Lit.	12690 Lit	85610 Lit
Milk Consumed at Home	39440 Lit	8360 Lit	47800 Lit.
Milk Consumed by Calf	250692 Lit	36760 Lit	287452 Lit
Milk Sold	363052 Lit	57810 Lit	420862 Lit
Additional Income through sale of Milk	**Rs. 84,67,260.00**	**Rs.13,05,670.00**	**Rs. 97,72,930.00**

Vocational Training:

Skill Based Vocational Training Programs prepares aspirants to work in various fields of trade. It provides equal opportunity for employment and livelihood. After completion of course, the aspirants are supported with employment to lead a sustainable livelihood. VSDHE uses various forms of formal, non-formal and informal learning which help in achieving social equality, inclusion and sustainable development. Some of the highlights of the program include:

- Life Skills and Values
- Spoken English
- Exposure visits
- One-on-One Mentoring
- Support for Placements
- Soft Skills Training Programs
- Practical Oriented Training
- Internships (based on each course)
- Pick-up and Drop Facility
- Digital Literacy and Financial Literacy
- Placement Tracking

Major Achievements:

Sr. No.	Major Activities	Plan	Achi.	Remarks
A) Tailoring Course				
1	Total Students Covered	50	61	Providing basic Tailoring Course to unemployed women and girls.
2	No. of Students Completed Course	50	37	Variance-13; due to other classes of Tailoring started and dropout-07
3	No. of Drop out Students	00	07	Dropout due to their own family problems
4	No. of Students In Course	00	17	Presently 17 students are under training.
5	Training of Sewing Machine Maintenance & Servicing	03	03	Conducted training on dated 24th Jun, 20th Aug 2019 and 24th Feb 2020 total 34 women participated in the training.
6	BSc. Optometry	07 new 7 Existing	00 7	07 variance- postponed support in next yr. due to change in policy 2018-19– 4 students 2017-18– 3 students
7	No. of Parents meeting	02	02	Conducted two meetings with students and parents for counseling Date: 22 Jan 2020 Attendance: Male:02 Female:06

Case Study - Tailoring

Name of Aspirant: Mrs. Vandana Ajay Bharsakde
Village: Pale Khurd Taluka Panvel District Raigad
Support of Course: Basic Tailoring Course
Support of Year: 2019
Family Profile: Vandana is 27 years of age and has 4 members in her family consisting of her husband and two sons. Her husband, the only earning member in the family, works at Taloja MIDC. His income is limited, and they find it difficult to subsist, due to which she aspires to financially contribute for her family's future. She was made aware of Ishanya Foundation's tailoring course which is one of its key pillars towards Women's Empowerment. She sought admission and learnt to stitch various types of blouses (simple blouse, katori blouse and fashionable blouse). Today she has started her own home enterprise and through IsFon, is able to provide a helping hand to improve the financial condition of her family.

Support Given	Average Monthly Income	Annual Income	Impact
Basic Tailoring Course	Rs. 7,800	Rs. 93,600	Children education, improved standard of living and saving money in bank for the future.

Aarogyam Project:

DFPCL is consistently working for improvement of health by providing doorstep health services through health check-up camp and as education initiative is a program that support students from standard 1 to 10 with tuition in all the subjects so that the students are encouraged to study and not give up their studies half way. Under the initiative special focus is given on difficult subjects like Mathematics, English and Science.

Kitchen Garden

Sr. No	Activity	Plan	Achie vement	Remark
01	Health check-up camps	02	02 (271 Patients)	(271 patients screened; 60 patients refer to MGM) Patients who come from a section of the society who cannot enjoy the privilege of expensive medical services availed the benefit of these check-up camps.
02	Eye Check-up Camps	3	03 (370 patients)	Venue: Pale Kh. IsFon Office Date of Camps: 26th April 2nd Aug. and 20th Dec 2019. Total Patients Screened:702 Cataract Detected: 157 Cataract Operated: 120 patients Spectacles distributed to 329 patients.
03	School Screening Camps	03	03	• Venue: Sanjay Gandi Madhyamic High school-Kolvadi, RZP School- Valvali and Sudhagad High School and RZP school Chindren • Dates of Camps: 23d Aug, 29th Nov 2019 and 31st Jan 2020, respectively. • Total Students Screened: 984 Spectacles distributed to 13 student, 73 students were referred to LCT for further treatment and diagnosis.
04	Kitchen Garden	400	400	Vegetable seed distributed to families from project area.
05	Mahila Melava	02	01	Conducted Mahila Melava on 17th Jan 2020 at Valvali village, during the melava Mrs. Ritcha demonstrates Yoga and Mrs. Uma Joshi given informative talk on Natural therapy. Total 132 women participated.

			Second Event cancelled due to COVID-19.
	• Doorstep Health Services with free medicine • Health Awareness Referral Services	**5985**	Objective: To improvement of health by providing doorstep health services through mobile clinic. Villages Covered: 22 (More than 30000 Population)

Type of Service Provided through Mobile Clinic:

a. Mobile Medical Units will help mobilise healthcare to conduct screenings, basic diagnosis and provide awareness and medication.
b. Mobile Medical Unit shall be equipped with a doctor and a nurse who were trained to recognise symptoms of health-related ailments, conduct basic diagnosis of common diseases, prescribe medication and referrals to specialised clinics in case of further medical complications.
c. Mobile healthcare services are able to cover Two to Three villages/locations in a single day.
d. The services provided would of necessity be preventive and promotive and outpatient curative care. Where there are cases needing acute medical care on the day the Mobile clinic reaches the site, such care would be provided, and patient referral organized.

Dyanam/CDSW:

Dyanam

Sr. No.	Major Activity	Plan	Achievement	Remarks
01	Digital School	20 Class	20 Class	Work is in progress to installation of digital set at 20 classes from Chindren Devichapada and Kanpoli village of ***Taloja (Maharashtra).***
02	Infrastructure Development	02 School	02 School	• Installation of blocks at primary school from Suva village of ***Dahej (Gujrat).*** • *Donation of Steel to MADP School, Kalamboli for Construction.*
03	Support for Manpower of School	01	01	Appointed one teacher (Math & Science) to fulfill requirement of Rahiyad Secondary school of ***Dahej MIDC (Gujrat).*** (Math and science)
04	Donation for Girls Education	1.11111 (Rs.)	1.11111 (Rs.)	DFPCL contributed Rs.1,11,111/- to Kanya kelavni Nidhi launched by Dept. of Women & Child Devt. of Gujrat Govt for Girls Education ***(Dehej, Gujrat).***

Support for Disaster Management

S. N.	Activities	Plan	Achi.	Remarks
01	***Support to Flood affected families from Sangli and Kolhapur District of Maharashtra***	500 Families	500 Families	Saree:500 Towel: 500 Blanket: 500
02	***Donation to Donkey Sanctuary Welfare Association (DSWA) for:*** ➢ To provide health related support to Donkeys which leads to increase or to start income to the affected families. ➢ Provide doorstep health services to animals. ➢ Provide feed and fodder support to 5000 donkeys	5000 Donkeys	5000 Donkeys	Support Given of Rs. 5 Lakh. (500 Families)

03	***Support done for watershed work to Mardi village of Maan Block, Satara District.*** Mardi is a large village located in Man Taluka of Satara district, Maharashtra with total 1071 families residing Was facing problem of water scarcity for drinking and agriculture.	1071 families	1071 Families	Rs.10 Lakh donated for completion of watershed work.

Helmet Distribution to Taloja Police Station Employees

ISHĀNYA FOUNDATION

50 Helmets Distributed to Police officers from Taloja Police Station.

Most of the officers are traveling on motorcycle while patrolling to manage traffic and other official works with in the Taloja MIDC. Apart from this most of the officers are traveling by motorcycle to reach office. Every officers or employee need motivation to perform better or maintain consistency in the work. This activity will motivate to police officers.

Objectives:

Aims to reduce the risk of serious head and brain injuries by reducing the impact of a force or collision to the head.

Wearing a helmet while riding greatly reduces the severity of injury and potential trauma to the head, the probability of death, and overall cost of medical care. A **helmet** is designed to cushion and protect a rider's head from the collision of a crash

Kanpoli Drinking Water Scheme

ISHANYA FOUNDATION

Sr. No.	Activities	Plan	Achi.	Remarks
1	Drinking Water Scheme	01	01	• Elevated Storage Capacity: 25000 lit. with 04 distribution Points in Kanpoli village. • Families Benefited: 250 families.

Employee Engagement

ISHANYA FOUNDATION

Initiative driven by Pani Foundation:

From DFPCL K1 and K8 Taloja, 43 employees were participated in the **Mahashramdaan** event at Jawalarjun Village on 1st May 2019.

DFPCL employees done Mahashramdaan by creating ~400 running metre farm bund. For this farm bund participant created around 80 trenches having size of 2M width and 0.30-0.45m depth. These trenches will hold more than 2 lakh lit of water.